Charles University in Prague

Faculty of Social Sciences

Institute of Economic Studies

BACHELOR THESIS

Population and Economic Growth

Author: Jozef Regináč

Consultant: Doc. Ing. Tomáš Cahlík CSc.

Academic Year: 2008/2009

Prohlášení

Prohlašuji, že jsem bakalářskou práci vypracoval samostatně a použil pouze uvedené prameny a literaturu.

Hereby I declare that I created this bachelor thesis independently, using only the listed literature and resources.

V Praze dne 17.5.2009 .....

Jozef Regináč

Acknowledgements

I would like to express my gratitude to Doc. Ing. Tomáš Cahlík CSc. for his helpful comments to my work on this thesis.

Further I would like to thank my family, my gilfriend and all my friends for their support in my personal life and studies.

Bibliographic entry

Regináč, Jozef. Population and Economic Growth. Prague: Charles University, Faculty of Social Sciences, Institut of Economic Studies, 2009, 53 p. Consultant of bachelor thesis Doc. Ing. Tomáš Cahlík CSc.

Abstract

We are all used to the population explosion which has been here for more than a century. The situation of population growth is going to change soon and population differences are going to grow. What are the consequences of this population change? This thesis examines the relationship of population change and economic growth, one of the most studied and watched macroeconomic variable. The thesis provides an overview of current situation of demographic transition and a short recapitulation of history of population economics. On this basis, the complexity of empirical studies of population change is explained by theoretical economic growth model, which demonstrates the importance of age structure of population for economic growth analysis.

Title:	Population and Economic Growth
Author:	Jozef Regináč
Supervisor:	Doc. Ing. Tomáš Cahlík CSc.
Academic Year:	2008/2009
JEL Classification:	O11, O40
Keywords:	population, economic growth, age structure, demographic transition

Abstrakt

My všetci sme zvyknutí na populačnú explóziu, ktorá tu je viac ako storočie. Táto situácia populačného rastu sa však bude čoskoro meniť a rozdiely medzi populáciami sa budú zväčšsovať. Aké sú dôsledky tejto populačnej zmeny? Táto práca skúma vzťah medzi populačnou zmenou a ekonomickým rastom, jedným z najsledovanejších a najštudovanejších makroekonomických ukazovateľov. Práca ponúka prehľad súčasnej situácie demogragického prechodu a krátku rekapituláciu histórie populačnej ekonómie. Na týchto základoch je vysvetlená zložitosť empirických štúdií pomocou teoretického modelu ekonomického rastu, ktorý demonštruje dôležitosť zahrnutia štruktúry populácie v analýzach ekonomického rastu.

Názov:	Population and Economic Growth
Autor:	Jozef Regináč
Vedúci práce:	Doc. Ing. Tomáš Cahlík CSc.
Akademický rok:	2008/2009
JEL Klasifikácia:	O11, O40
Kľúčové slová:	population, economic growth, age structure, demographic transition

List of contents

1 INTRODUCTION 1

2 HISTORY 3

2.1 Malthus 3

2.2 Population debate 4

2.2.1 United Nations (1953) 5

2.2.2 United Nations (1973) 6

2.2.3 National Academy of Sciences (1971) 7

2.2.4 National Academy of Sciences (1986) 7

2.3 1950 - 1980 8

2.3.1 Ansley J. Coale and Edgar M. Hoover 8

2.3.2 Julian L. Simon 8

2.4 1980s 9

2.4.1 Revisionist consensus 10

2.4.1.1 Empirical propositions 10

2.4.1.2 Variables versus constraints 11

2.4.2 1990s 13

2.5 Reconciliation 15

3 DEMOGRAPHY 16

3.1 Methodology 17

3.2 Mortality rate 17

3.3 Life expectancy 19

3.4 Fertility rate 20

3.5 Population growth 21

3.6 Net migration 22

3.7 The demographic transition 23
3.8 The demographic transition and economic growth 26
3.9 The empirical studies 28
3.9.1 Study of Jeffrey G. Williamson 28
3.9.1.1 Economic hypothesis 28
3.9.1.2 Simple Growth theory 28
3.9.1.3 Econometric Results 29
3.9.2 David Bloom and David Canning 29
3.9.2.1 The motivation 30
3.9.2.2 Theoretical model 30
3.9.2.3 Results 31
4 THE MODEL 32
4.1 Cobb-Douglas production function 32
4.2 Consumption and subsistence consumption 34
4.3 Labor and population 38
4.4 The savings space 38
4.5 Economic growth as interaction of the labor and capital growth 41
4.6 Economic growth theory 42
4.7 Population change 43
4.8 Labor change 46
5 Conclusion 51
5.1 The empirical uneasiness 51
5.2 The reality of feedbacks 51
5.3 The possible population policy 52
References 54

List of figures

Figure 3.1 Infant mortality rate 1950-2050 18
Figure 3.2 Life expectancy at birth 1950-2050 19
Figure 3.3 Fertility rate 1950-2050 20
Figure 3.4 Population growth rate 1950-2050 21
Figure 3.5 Net migration rate 1950-2050 22
Figure 3.6 Age structure 1950-2050 24
Figure 3.7 Age dependency ratio 1950-2050 27
Figure 4.1 Cobb-Douglas production function for labor force 33
Figure 4.2 Cobb-Douglas production function for labor force with population 33
Figure 4.3 Consumption function 34
Figure 4.4 Subsistence consumption function 35
Figure 4.5 Consumption function with population 35
Figure 4.6 Consumption and subsistence consumption function with population 36
Figure 4.7 Adjusted consumption function 37
Figure 4.8 Labor and population ratio 38
Figure 4.9 Cobb-Douglas production and subsistence consumption functions with population 39
Figure 4.10 Cobb-Douglas production and adjusted consumption functions with population 39
Figure 4.11 Adjusted savings function 40
Figure 4.12 Isocapital production function 41
Figure 4.13 Isolabor production function 42
Figure 4.14 Savings adjustment to population growth 44
Figure 4.15 Capital change adjustment to population growth 44
Figure 4.16 Adjusted savings function and population growth 46
Figure 4.17 Economic growth adjustment to labor growth 47
Figure 4.18 The shift of isolabor production function 47
Figure 4.19 Capital change adjustment to labor growth 49
Figure 4.20 Adjusted savings function and labor growth 50

1 INTRODUCTION

The variety of the World provides an inspiration for every scientist. Economists, as economic scientists, find their inspiration in the variety of economies around the World. Current situation over the World is a striking example of highly various economies, but what are the reasons for such a variety? What is the source of the variety?

Another dimension of the variety of the World lies in population. Current expansion of the World population is high, but it does not take place in all countries. In addition there is also a great variety of size of nations, which is the consequence of the historical development of countries, and together with the population expansion, they create enormous overall diversity of the distribution of population around the World.

Economists have been developing a theory about the principles of the markets over more than 200 years. The theory covers a lot of themes, which tries to give answer to the functionality of the markets. In spite of the fact, that many market mechanisms have been explained, many principles are still waiting to be discovered. The question of population and its impact on the markets was studied through the history of economic science repeatedly, but the population as one of the important variables still does not appear in the mainstream models. The reason for this might be seen in the complex way of the impact of population on economy. The last 50 years brought new insights into the population problem and studies of the population impact had been cumulating.

The purpose of this thesis is to sum up recent stage of the development of economics in this field and to provide an answer for the problematic methodology of the examination of the population impact on economic growth. In that matter, the structure of the thesis is build to guide a reader through the historical facts to the economic theory, which particularly explains the problem of the evaluation of the population consequences.

In the first part, we describe in detail historical development of the economic theory about population. The emphasis is put on the development of the interpretation of the results of various empirical studies, which is accompanied by rise of new school of reasoning, revisionism. At the end of the historical chapter is a summary of economic theory in the field of population with the most influential concepts.

The second part tries to give a reader basic description of the current situation of population variety in the World. The emphasis is put on the comparison of countries in different stages of development. This section provides also a basic tutorial to economic

demography and its problems. At the end of the part, we put back our interest in population economics and describe some empirical studies, which are most recent. These studies also prove the ideas of population impact on economic growth used in the theoretical part.

The last part is theoretical, building on the main-stream economic growth models, we try to unveil the mechanism, which is behind the variety of the results of the empirical studies. As the impact of population is rather complex, the adjusted economic growth model is gradually explained in detail, which gives the reader a better chance to understand the problem.

In the conclusion, we sum up all the implications from this thesis and outline some of the adjustment of the model to reality. Part of the reason, for building this theory, was to provide an advice for population policies. As this model is not empirically proven to be right, we provide only some possible implications for population policy.

2 HISTORY

2.1 Malthus

In 18th century, economic science started to form as political economy. The origin of the term political economy lies in the interest of authorities to study states – polities, what implies macroeconomic perspective. In this respect, one of the famous authorities of political economy, Thomas Robert Malthus, contributed to economics by ideas about population. He wrote several essays on population theme in the end of 18th century and the beginning of 19th century called „An Essay on The Principle of Population".

Malthus set strong assumptions about the natural principles of reproduction and production growth. The reproduction, as Malthus believes, is driven by the passion between sexes, which is necessary and under no regulation primary to human species. Therefore, population can actually increase its number in geometrical progression. On the other hand, means of subsistence, considering mainly food supply, can increase just by productivity increase. In the best conditions for productivity increase, means of subsistence can only increase itself in arithmetical progression.

From comparison of these growth rates, he concluded that means of subsistence cannot support population growth. As true economist, Malthus also studied consequences under release of such strong assumptions and he found ways how population can naturally check itself. One way of reduction of the population growth is the definitive checks of population such as starvation, famines and wars. Those are extreme cases, where no other checks take place. Malthus also saw ways, how to evade such disasters by natural and preventive check, moral restraint. People always have possibility to decide about marriage postponement, number of children and contraception. Therefore there is chance that population would increase in the same pace as food supply in case of moral restraint of population.

Although Malthus found checks for population growth, his work made impact into the history of economic science with the conclusion that human population will always be limited by the ultimate check, food supply. By this point political science gained label 'dismal science' with its pessimistic predictions.

2.2 Population debate

Centuries later, economics became more popular and more optimistic, but in the case of population, pessimism was still present. Alarmist view, that rapid population growth has negative effect on the pace of economic development, was dominating in the economic science till the 20th century, when swings in thinking about population impact started to unveil.

During the time of Great Depression, Alvin Hansen and the stagnationists pointed out that slow population growth was partially a cause of aborted economic recovery (Birdsall, Kelley, Sinding; 2001). This different way of insight into population economics continued to the settlement of completely new thinking among economists, the so-called "population revisionism", which in the 1980s downgraded the role of rapid population growth as a source of economic growth in the Third World and highlighted the role of other factors.

Population revisionism was the biggest swing from the 1960s and 1970s "traditionalism" or "population-alarmism", which considered rapid population growth to be an obstacle to per capita economic growth and development. In contrast, population revisionism took deeper insight into population indicators and examined its impact by more factors with equal or greater importance than rapid population growth. Revisionism took into account longer period of population consequences with possible indirect feedbacks within economic institutions.

It needs to be emphasized that the distinguishing feature of population revisionism is not the direction of the net population impact. In spite of this fact, many of revisionists believe, that slower population growth would be beneficial for the Third World. The ultimate goal of population revisionism is to make more moderate conclusions about population growth rather than just net assessment of impact on per capita income.

As revisionism was revolving throughout the history, significant swings could be found in reports of institutions, which were developing population economics. From the 1950s to 1980s we can find important differences in thinking between four reports of two institutions: National Academy of Science (NAS) and United Nations (UN). Comparison of these reports gives us a chance to see the variety of population debate in history, which confirms complexity of assessment of population impact.

Despite this complexity, it is important to know, that the variety of conclusions of these reports was not fully caused by economists. Better way how to look at the progress of thinking is as interaction between economists and non-economists. Because revisionism

among economists was dominant view since post World War II period, it is not appropriate to talk about shift of thinking to revisionism in 1980s among economists.

In fact, we can see rise of influence of economists on reports' conclusions through history. As a source of this elevation, we consider several hypotheses. In this period, empirical research was gradually accumulated, weakening traditionalist conclusions and supporting revisionism. Theory of economic growth has also changed and progressed, taking into account technological change and human capital. Importance of institutions has increased, therefore interaction between population and government, economic policies, markets, also influenced the debate. Analyses of demographic factors were broadened to indirect effects and longer periods. Ideas of Julian L. Simon (1981) about Reagan Administration's population policies triggered the commissioning of the 1986 NAS Report (Birdsall, Kelley, Sinding; 2001). All of these facts can account for arising revisionism in history, what could be best seen in the analysis of four reports below.

2.2.1 United Nations (1953)

"*The 1953 UN Report represents the most comprehensive and systematic assessment of the consequences of population growth since Malthus.* " (Birdsall, Kelley, Sinding; 2001, p. 28) Within its system of distinction between positive and negative effects, short-run and long-run effects and also direct and indirect effects, this report provided guarded net-impact of population growth with stress on diversity based on national conditions.

Main author of the chapters of this report was Joseph J. Spengler, who can be considered the founder of modern economic demography in US. Already here is easily recognizable revisionism in three attributes.

1. Time distinction between short-run and long-run is important, the report shows this on two sectors.

Natural resources are taken as fixed supplies, from which rises the idea of diminishing returns, typical Malthusian dilemma. But the report distinguishes natural conditions between 'constants', and 'variables'. Constants are natural resources which are not controllable, whereas variables belong to category of the controllable resources. "*In different times and places, variable factors may be considered a constant, and vice versa.*" (UN, 1953, p. 181) Modern economies can often transfer resources well known as constants into variables.

Dominant idea about labor force, that population and labor force growth, with other factors unchanged, would lower per capita output is rather unrealistic. In real life, factors,

which affects production, change simultaneously, therefore the net-impact conclusion has to take into account also all the circumstances. (UN, 1953)

2. After considering all the circumstances, they marked 21 economic-demographic linkages. In sense of revisionism, the report also divided them into three groups with positive (scale, organization), negative (diminishing returns) and neutral (technology and social progress) impact. (Birdsall, Kelley, Sinding; 2001)

3. Examining indirect effect, the report concludes the fact, that complete list of factors is needed for assessment. The reason is that examining with an incomplete list of factors can lead us to wrong results, because of interdependency of some factors.

After considering all the effects, the report concludes several statements. Population growth may tend to raise per capita output in industrialized countries. In other countries, report accept that population growth may hinder per capita growth, especially in case when it hinders formation of capital. (UN, 1953)

Below these eclectic results, two factors can be signed. Authors were uncertain about the importance of migration and the effects of population growth on savings and investments. For this reason, they called for empirical studies of the impacts on savings and investments what turned out to be primary emphasis of research in next two decades. (Birdsall, Kelley, Sinding; 2001)

2.2.2 United Nations (1973)

Report of the United Nations from 1973 changed previous revisionist results and replaced them with more pessimistic ones. In this report, conclusions from empirical studies are influenced mostly by empirical studies of Simon Kuznets. Rapid population growth is considered to be a burden on society in developing countries, but with note that there has not been revealed any association between population and economic growth. It is uncertain what these pessimistic conclusions were based on, because empirical studies in report are guarded. Only two background papers show adverse impact of population growth on the food balance and on capital formation. These papers represented traditionalist view in the report, assessing only short-run and direct effects which were based on very influential Coale-Hoover model.

The most important new contribution was the finding of empirical studies of Simon Kuznets. He tested a simple correlation between population growth and per capita output and found no relationship at all in the data. This result played an important role in deliberations from traditionalist thinking and helped keep population debate alive. (Birdsall, Kelley, Sinding; 2001)

2.2.3 National Academy of Sciences (1971)

NAS Report from 1971 represents the most traditionalist and population-alarmist perspective. Summary of the report is full of conclusions about adverse effects of population growth and the seriousness is underscored by a quantitative speculation, that a one-quarter reduction in birth rate, would increase the per capita income growth by one-third (Birdsall, Kelley, Sinding; 2001). This part of the report is written in traditionalist view, focusing on short-run and direct effects.

Despite this fact, background papers are already revisionist and less pessimistic in conclusions. Theodore Schultz's paper about impact of population growth on food supply shows that problems of adjusting food supply to population are related to non-demographic factors. Harvey Leibenstein with his paper pointed on replacement effect of human capital and potential economic growth. Problem of externalities was studied by Paul Demeny, who was skeptical about summary assessments of population's net impact.

2.2.4 National Academy of Sciences (1986)

In contrast, the NAS Report from 1986 returned to revisionist thinking with guarded and qualified assessment of the net impact of population growth on development (Birdsall, Kelley, Sinding; 2001). Report is built on individual and institutional responses to population change, which confirms revisionist methodology. Empirical studies since 1971 Report qualified many of the hypothesis central to the population debate. An interesting fact about this report is that it was compiled almost entirely by economists. Their assessments were faithful to background papers and were revisionist.

As we could see, the swing in economic thinking about population was noticeable. It was mainly gaps between guarded assessments of 1951 UN and 1986 NAS Reports, and strongly traditionalist assessments of 1971 NAS and 1973 UN Report. Despite this fact, background papers written by economic-demographers of all these reports are revisionist. Therefore large swings in population debate could be assigned to changing influence of economic-demographers. "*Revisionism appears to be the dominant methodological perspective among economic-demographers in assessments of the consequences of population growth.*" (Birdsall, Kelley, Sinding; 2001; p. 34)

2.3 1950 - 1980

In period of the population debate, there have been contributions of three scholars which meant progress in population economics. Ansley J. Coale and Edgar M. Hoover, who contribute to the foundation of traditionalism in the 1950s, and Julian L. Simon, who helped revisionism to dominate.

2.3.1 Ansley J. Coale and Edgar M. Hoover

Coale and Hoover study (1958) on Mexico and India "Population Growth and Economic Development in Low-Income Countries" was one of the most influencing publications since 1950. They used logical structure: articulating theoretical linkages between population and economic growth, formalizing these linkages into mathematical model for forecasting in intermediate-run and final case study; which was easy to understand and conclusions in their study were guarded and qualified.

Mathematical model unveiled three adverse effects of population growth. First of all, capital-shallowing, which means reduction in the ratio of capital to labor, and happens because of no relationship between population growth and increasing rate of savings. Age-dependency, as increasing youth-dependency in households, reduces the rate of savings, because of additional consumption of new children. And finally, a shift of government investments to education, instead of more productive and growth-oriented investments, called investment diversion.

These adverse impacts had a substantial impact on thinking until the 1980s. The model also served as a source for 1973 UN Report and characterized traditionalist perspective: the short to intermediate run, induced feedbacks of population pressures and without any positive impacts on per capita output growth. Despite sufficient progress in empirical studies and economic theory in 1960s and 1970s, the model was still accepted until the 1980s.

2.3.2 Julian L. Simon

The model of Coale and Hoover was dominating until Julian L. Simon published his book "The Ultimate Resource" in 1981. The book became famous by Simon's debating style and his conclusion that in intermediate run, population growth has a positive impact on economic development in many Third World countries. Important thing about Simon's book is that he used revisionist methodology, focusing on the longer run and

stressed out the importance of feedbacks. The effectiveness of Simon's 'debating' writing style could be the most evident in his analysis of population-resource interactions.
A second impact of his book was in stimulating several systematic reassessments of the consequences of population growth. He collected several empirical studies and put them together in one survey, so together the studies had bigger impact than separated, which stimulated further elevation of revisionism.

2.4 1980s

After period of population debate, 1980s confirmed dominant role of revisionism in the assessment of population impact. Surveys, made in this period, were using methodology of revisionism, such as long-run in perspective, the multi-dimensional aspects, etc. All of them respected new theoretical background that highlighted human capital, technical change, public policy and institutional settings.
The World Bank's "World Development Report" (1984) may appear as pessimistic, but the statements about adverse effects of population growth are always supplemented by additional assumptions. The Report also concludes three important ideas: (1) downplaying the role of economic growth as determinant of decreasing savings, (2) elevating the importance of adverse effects of population growth on human capital accumulation and poverty, (3) recognizing that countries with larger population can benefit from its population through scale economies and market demand. Together with the 1986 National Research Council assessment of population impact, Nancy Birdsall, as a member of both teams, concludes from the reports that "*rapid population growth can slow development, but only under specific circumstances and generally with limited or weak effects*" (Birdsall, 1988).
McNicoll's (1984) survey concludes that "*rapid population growth is a serious burden on efforts to generate sustained increases in per capita product*", but he too agrees with downplayed traditional saving linkages, and modest role of scale. He is impressed by positive impacts of population pressures in stimulating innovation. His strongest negative assessment is adverse effect of population pressures on kinship structures and international relations.
In Kelley's report, we can find revisionist conclusion about population impact. He also highlighted the importance of setting for an adverse impact. According to his survey, an adverse effect of population growth can be more likely, where (1) water and arable land are scarce, (2) property rights are poorly defined, and (3) government policies ineffective

and biased against labor. He put caution on treating many popular 'problems' (e.g. unemployment, malnutrition, famine, environmental degradation) as demographic.

Srinivasan was one of the important contributors to 1986 NAS Report and his survey (1988) parallels the conclusions of the report. He concludes that "*many of alleged deleterious consequences result more from inappropriate policies and institutions than from rapid population growth. Thus policy reform and institutional change are called for, rather than policy interventions in private fertility decisions to counter these effects*".

Birdsall's survey (1988) extends the analysis to the microeconomic level and emphasizes the endogeneity of parental decisions with respect to family size and investment in children. She also put a greater weight on consequences of market and policy failures on parental decision-making with respect to childbearing and rearing.

2.4.1 Revisionist consensus

At the end of the 1980s, there was an uneasy consensus among the economist participants of revisionist population debate. On the one hand, they were held together by agreement on several empirical propositions and on identification of areas, where population assessments were not so definite. These areas are discussed below, on the ground of several studies. On the other hand, the consensus did not agree on the importance of various feedbacks, such as a way how government policies should be viewed and how important is population-induced technical change in agriculture. Inconclusive research of some areas of potential impacts was also threatening the consensus.

2.4.1.1 Empirical propositions

Non-renewable Resource Exhaustion The general idea, that the exhaustion of non-renewable resources is a result of population growth, appeared to be weaker than assumed. Studies of settings of resource market, technological change in resource industry, the responsiveness of conservation and interaction with government policy confirmed the new conclusion and the use of revisionist perspective for assessment.

Saving and Investment The idea of reduction of savings due to population growth was not confirmed by empirical research. Robust empirical research was performed, but a conclusive result was not obtained. Although capital-shallowing in period of population growth was confirmed by data, the impact on economic growth was not so strong. This fact was shown by simple growth-theoretical empirical assessment, using computable

general equilibrium models (illustrated also by Kuznets, 1967). These two conclusions became qualifications of the Coale-Hoover model, what also helped the elevation of revisionism.

Human Capital Accumulation The concern about a shift of investments from 'more productive' opportunities to education, because of population growth, was not confirmed by data. Additional expenditures of fiscal policy in period of population growth were covered by some other public sources (deficits), or reductions in per pupil expenditures, and did not cause a reduction in investments in any other areas. This conclusion was reached by several independent studies.

Resource Degradation Effects of population growth on renewable resource degradation were warranted. This conclusion might seem pessimistic, but still revisionist in orientation with long-run evaluation and analysis of feedbacks.

2.4.1.2 Variables versus constraints

Two areas of the revisionism were subject to uneasiness in the consensus about the revisionist principles. It was the assessment of the empirical strength and speed of adjustment of 'feedbacks' and, related to this, the extent at which institutions should be considered as 'variables' (revisionism) or 'constraints' (traditionalism) in the population analyses.

Government Policies Main reason for doubts about revisionism in consensus was a consideration of the role of government policy-making environment in Third World. The problem lay in whether policies should be taken as 'given' or 'variables' with response to population pressures.

Government policies are conditioning the form and the size of population impact. These policies are changing in response to demographic change. Unfortunately, models of government behavior in times of demographic change are not available. Models of demographic change therefore used to take government policies as given. This view is right until the moment when government policies are responding to demographic change. "*In general, those countries where government policies have encouraged production patterns at variance with comparative advantage by under-utilizing labor have experienced greater costs and fewer benefits of population growth.* " (Birdsall, Kelley, Sinding; 2001; p. 42) Revisionist found out, that many of the adverse effects of population growth are largely the result of bad government policies. A major impact of population growth was to reveal such government policies and to accelerate and strengthen the adverse consequences.

Therefore, revisionism does not support the idea of population policies, which should slow down population growth, to be the instrument, because it would just postpone the adverse impacts of unsuitable economic policies, which should be changed instead. This proposition is too strong because of either-or character of choice. Both economic and population policies are independent in interacting with the economy, so a combination of policy changes may be more appropriate. This fact is also discussed in Srinivasan's survey (1987), where unsuitable population policies are taken to solve the short and intermediate problem of starvation and Srinivasan is explaining misplaced emphasis on population policy. The World Bank (1984) highlights the contribution of the reduction of population growth, but only with the right macroeconomic policies. Important principle by the World Bank is to distinguish between short and long run effects of population policies.

Since consensus was focused on 'population problems', population impact will depend on whether policies are taken as a constraint or variable in the analysis and whether such policies are quantitatively important.

Agricultural Technology The linkages between population growth and size, and labor productivity in agriculture are important, because of the major role of the agricultural sector in the Third World countries. Diminishing returns to labor due to a limited supply of land can be offset by technical change or scale economies. Therefore the linkages can only be obtained by empirical research. Since in most of the Third World countries land is not expansible, research is focused on relationship between population growth and size, and land intensification.

Empirical records vary throughout countries. Most of Asian countries experienced technical change due to population growth, but there are examples, where new agricultural technologies did not appear. The research shows that this variety of results is determined mainly by institutions as markets, land-tenure arrangements, and government policies. Clearly the relationship between population growth and size, and land intensification depends on the impact of population growth on institutions. But the generalization is not possible, because some of the studies showed that also growth of population densities encourages improvements of institutions.

Again, the result of assessments strongly depends on whether institutions are taken as 'variables' or 'constraints', and if variables, the speed and ways of institutional change caused by demographic change is also important. The linkages between population growth and agricultural change cannot be assessed before theories of institutional change

will be formalized and tested and incorporated into modeling of the impact of population growth. No consensus can be made until this occurs.

Bottom Line The main subject of consensus continues to be the strength and nature of 'feedbacks', which influence initial impacts of population growth. Traditionalists avoid these feedbacks by a short-run analysis, assuming them as 'given' or hypothesizing them as quantitatively unimportant. An example of remaining traditionalism is a comment by Nathan Keyfitz (1991 c), a demographer, who wrote: "*The range of these [intermediate variables] is limited only by the imagination of the writer…* " (Keyfitz, 1991, p. 3). This Keyfitz's statement confirms undying population debate and continuing difficulties of revisionism to achieve consensus.

2.4.2 1990s

Until now, we were focusing on the factors which influenced the prominence of revisionism in 1980s. The present section describes the analysis made in the 1990s.

During 1990s, there have been four major research themes, which were emphasized. The first one was an attempt to reassess the consequences of population growth on the pace of economic growth. This research was driven by surprising results of empirical research from 1980s, where negative relationship was found, whereas researches from 1960s and 1970s indicated no, or at most, weak relationship. The second major research focused on microeconomic/social studies, which were trying to explain a relationship between size of family and household nutrition, health and education. The third research theme was, as well as environmental themes were elevated worldwide, the consequences of population growth on environment. The last of the research themes was an attempt to reassess the connections between population pressures and family.

Three studies represent a convenient basis of the 1990s population research. These studies also provided background for the 1994 Cairo Population Conference[1].

World Bank The first study, sponsored by the World Bank and undertaken by Kelley and Schmidt, confirmed the results of five earlier studies about the negative impact of population growth on per capita output in 1980s. Kelley and Schmidt also extended the modeling in two directions, (1) explaining several demographic trends by the popular convergence model, or technological gap, paradigms and (2) developing the dynamic model of the population impacts over the life cycle.

[1] Events on the Cairo Population Conference leaded to idea of writing a summary book 'Population Matters' by Birdsall, Kelley and Sinding, which is the main source of this paragraph

The Kelley and Schmidt research confirmed the negative impact of population growth on per capita output in 1980s, but extended the results depending on type of country, distinguishing between DCs (developed countries) and LDCs (least developed countries). The research showed the positive impact of population growth in the DCs, whereas negative relationship in the LDCs. They explained these findings by hypothesizing about the timing of demographic change. Since the economic impact of the new born varies over the life time, models should take this into account. Earlier empirical studies with results of no correlations were related to this dynamic modeling of the life time impact. This interpretation was confirmed also by studies made by Bloom and Williamson (1998), and Radelet, Sachs, and Lee (1997). All of these studies were revisionist, since the impact of demographic change was considered to be positive, negative or neutral in certain point in time, depending on timing of effects, such as (positive) labor force and (negative) dependent population growth. Only by this method, the impact of demographic change can be properly assessed (Birdsall, Kelley, Sinding; 2001).

Overseas Development Council; Government of Australia Two other studies provided background for the Cairo Population Conference. First one "Population and Development: Old Debates, New Conclusions", sponsored by Overseas Development Council, was written by Robert Cassen (with 15 participants). Dennis Ahlburg (with 10 participants) wrote "The Impact of Population Growth on Well-being in Developing Countries", which was sponsored by the Australian government.

Two studies confirmed the results of the earlier studies of 1980s. No alarmist conclusions are present in the results of analysis, balancing between short and long run effects of demographic change, taking into account a wide variety of impacts and feedbacks.

Shift in orientation from macroeconomic to microeconomic impacts of large families is present in these studies. Specifically, the impact of large families was found to be negative on nutrition and health. The adverse impact of large families on educational attainment and participation was also present in these studies, but here the evidence is mixed, because of several studies conclude no, or even positive impact of large families.

The conclusions of the studies are comprehensive. Cassen's study (1994) concludes that there are clear negative consequences of large families on the health and education of children, on mother's health and life opportunities. This statement refers to microeconomic level, whereas macroeconomic conclusion depends, by Cassen, on circumstances. Ahlburg (1996) names several areas in poor agrarian societies, where slowing of rapid population growth is advantageous (e.g. economic development, health,

food availability, etc.), where the result is unknown (e.g. poverty), and where the impacts are relatively small.

2.5 Reconciliation

It is strange that the assessments of 1951 United Nations Report about the consequences of the population growth has not changed much over the five decades. The debate about this problem has been vigorous, as we could see on the population debate, where traditionalism was gradually suppressed outside of the debate. The revisionism has become major technique of the analysis, described as a focus on longer-run, emphasized feedbacks, direct and indirect effects, and a wide range of impacts, both positive and negative.

The revisionist research demands the extended time period of analysis and the variety of forces that must be taken into account. The research in this way has expanded in last five decades, the results appear to be strong and they downgrade the traditionalist empirical propositions. Revisionism also discovered several areas, where more research is needed (e.g. the impact of population growth on poverty, the environment and the interaction with policy environment).

While some results show negative impact of population effect, the good news is that the debate becomes increasingly productive in outcome. Whereas the main outcome of the population debate is to continue debating, the good thing is that revisionism based these debates on a solid basis.

3 DEMOGRAPHY

World is in the middle of demographic transition. We are all living in times of population boom, when historical consequences caused demographic transition all around the World. From late 19th century, mortality rate started to fall while fertility rate took a longer time to adjust to new conditions, creating population growth in such intensity, that the world population has more than doubled its numbers in half of the century.

Figure 3.1 World population 1950-2050

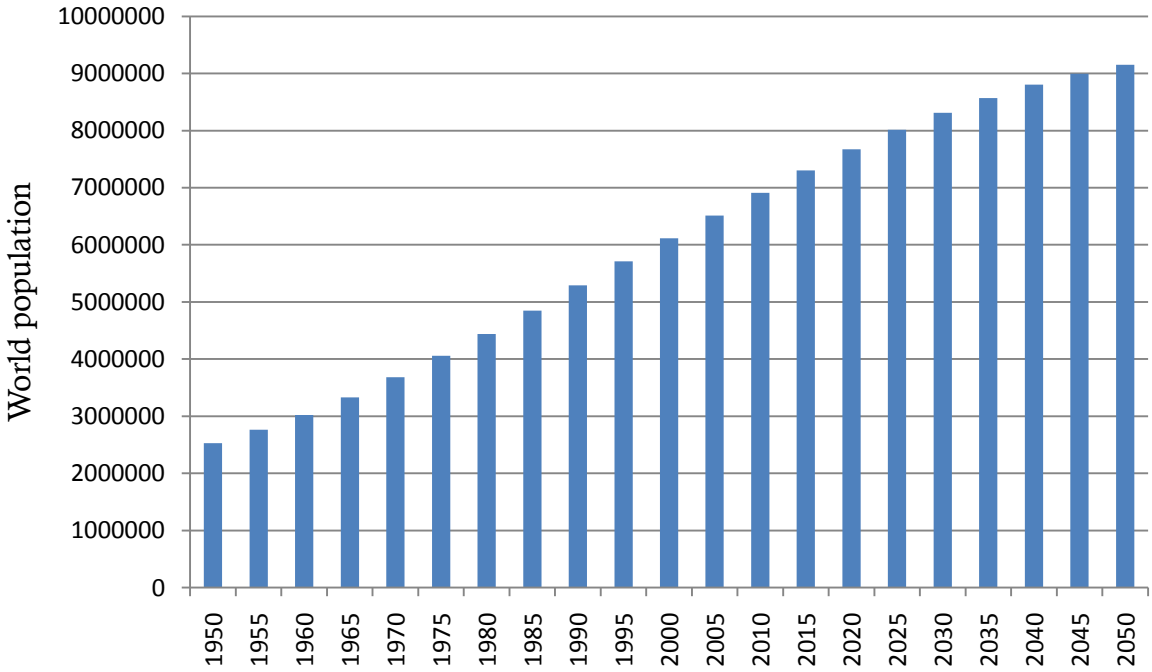

Source: Population Division of the Department of Economic and Social Affairs of the United Nations Secretariat, World Population Prospects: The 2008 Revision, http://esa.un.org/unpp

As we can see on the graph we are in the middle of enormous population change, which is going to continue at least until 2050, according to United Nations 2008 projections. The demographic transition, defined as "*a pattern of change in birth, death and population growth rates that accompanies the process of development*" (Birdsall, Kelley, Sinding; 2001), is happening right now and everywhere over the world. The variance of timing and size of the demographic transition over the World is high and therefore, this consequence of development has various effects around the world.

The process of demographic change began with a drop in mortality rate and an increase in life expectancy, which were caused by development and improvement of health services in human society. As the fertility rate is influenced by the personal decision making of people, it remained at the same level even if mortality rate fell. As people realized the decreasing mortality and increasing life expectancy, they adjusted their plan

for childbearing and fertility also started to fall. This is the middle part of the demographic transition, when fertility is above mortality, causing population growth. After some time, when fertility decrease to the level of mortality, as people's plans adjust fully to the new health and life conditions, population growth will fade out.

The basic description of the demographic transition gave us the right point of view from which to look at population's history and current situation in the world. The comparison of different stages of demographic change of countries is shown in following sections.

3.1 Methodology

We use data from United Nations 2008 Revision for the period 1950-2050, with estimated values for the future. United Nations divides countries into three groups: more developed countries, less developed countries and least developed countries. In addition we compare them with World and Europe numbers.

Mortality rate used is referring to infant mortality rate, defined as a number of deaths per 1,000 live births. This measure is standardly used for demographic analysis because it is least influenced by factors other than stage of development of health services.

Another measure, life expectancy at birth, is also used by modern demography because it reflects the purest relationship to the health services actual stage.

We use fertility rate defined as births per woman. It provides us with a better chance to compare it with the replacement level, which is estimated to be 2.1 births per woman in industrial countries and 2.4 births per woman in developing countries. The replacement level is above 2 because more boys are born than girls and not all of the girls survive till the reproductive age (Batini, Callen, McKibbin, 2006).

Population growth rates and net migration rates are estimated by United Nations.

3.2 Mortality rate

The historical development of countries caused the improvements in health services which directly influenced the life expectancy and mortality rates. And by that point, the demographic transition had started as mortality rate fell. This process had different timing around the world mainly because of the stage of development of countries. The comparison is shown on the following graph.

Figure 3.1 Infant mortality rate 1950-2050

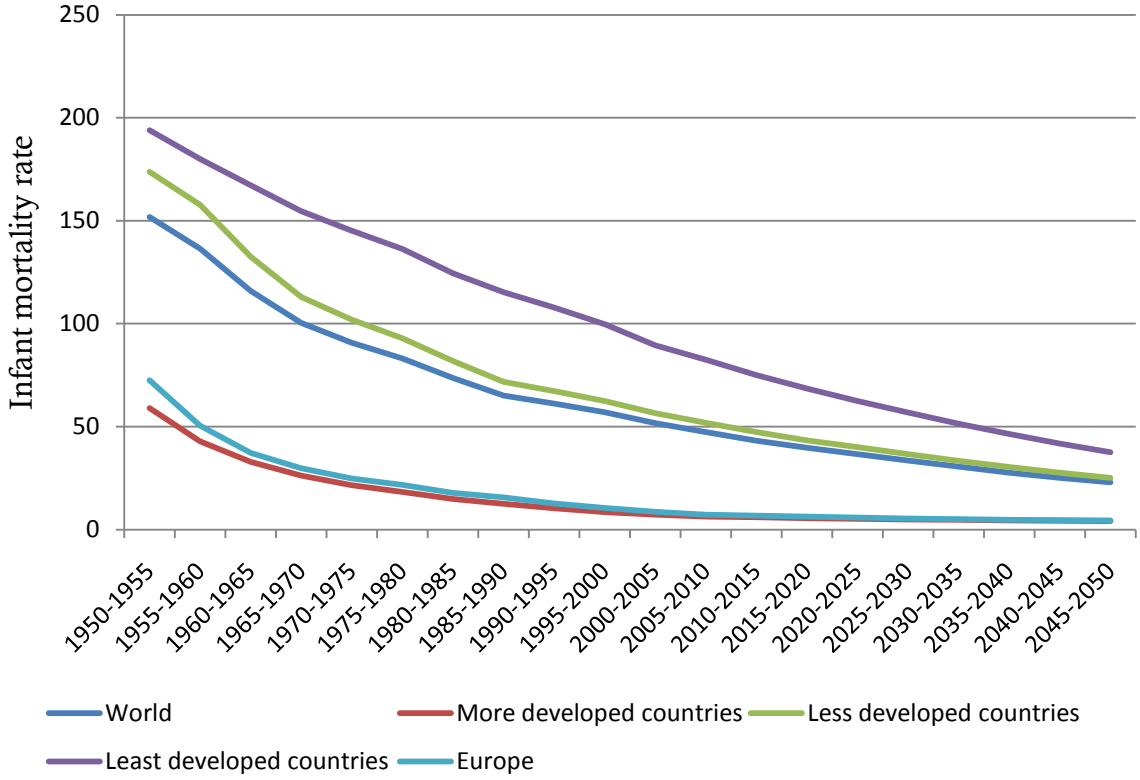

Source: Population Division of the Department of Economic and Social Affairs of the United Nations Secretariat, World Population Prospects: The 2008 Revision, http://esa.un.org/unpp

With no surprise, the highest mortality in 1950 had been in least developed countries, less developed countries were just a bit better, whereas the more developed countries were in the best situation. The decreasing trend is evident in all the countries, but again, the best situation is in the more developed countries, where mortality rate had decreased to mortality rate of 8.5 in half a century and is projected to decrease to 4.1 in the next half a century. Less developed countries had a success with the higher pace of falling mortality during 1950-2000 but estimates for the future indicate slowdown of this pace. Still, decreasing mortality rate occurs at least until 2050 with mortality rate of 25.1, well above mortality rate in more developed countries. Least developed countries started and are projected to stay with the highest mortality rate for the whole period, but the improvement from 194 to 37.6 through century is still very notable. Europe started a bit above more developed countries, gradually converging to their values and moving above in the future. World mortality rate is going to decline with mortality rate of 22.9 in 2050.

3.3 Life expectancy

Part of the health-services-improvements effect is visible on the data of life expectancy. This variable is not directly affecting demographic change, but the effect on the people's decision making about family, which is influencing fertility rate, is therefore also important for better understanding of historical process of demographic change.

Figure 3.2 Life expectancy at birth 1950-2050

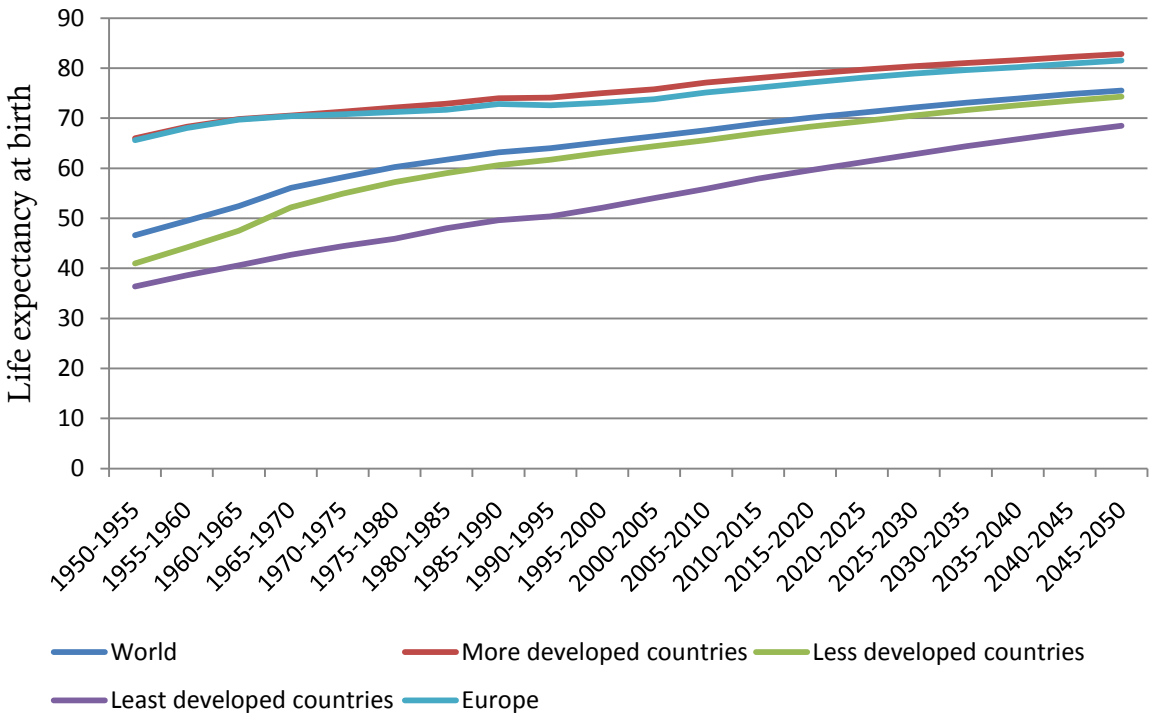

Source: Population Division of the Department of Economic and Social Affairs of the United Nations Secretariat, World Population Prospects: The 2008 Revision, http://esa.un.org/unpp

Leading countries with highest life expectancy are more developed countries and Europe. The progress of less developed countries and least developed countries with more than 30 years prolonged life expectancy at birth is proving our idea of improving health services. The world life expectancy is also making a progress over watched period. The size of the improvement of life expectancy from 1950 to 2050 is the main factor of falling fertility rate which influences demographic transition.

3.4 Fertility rate

As we already mentioned, fertility rate in history started to fall later than mortality. This delay of fertility rate due to people's decision making is visible on the United Nations data.

Figure 3.3 Fertility rate 1950-2050

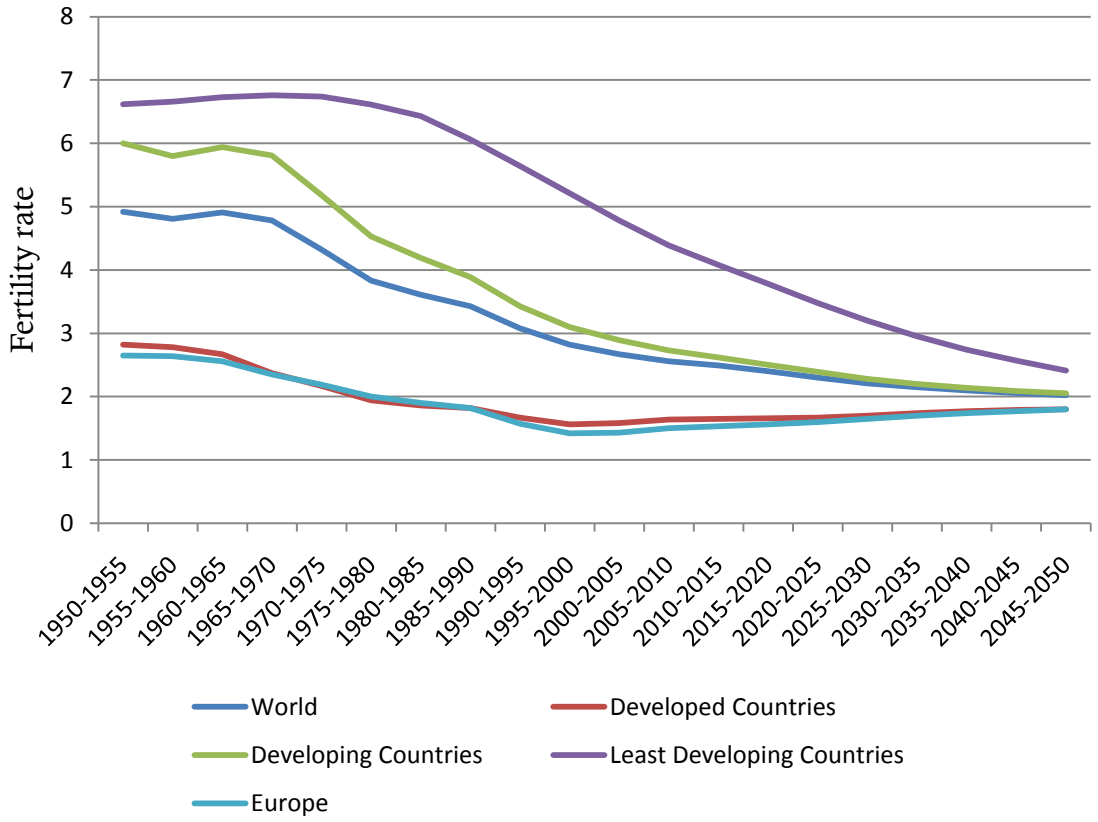

Source: Population Division of the Department of Economic and Social Affairs of the United Nations Secretariat, World Population Prospects: The 2008 Revision, http://esa.un.org/unpp

As we can see on the graph, trend of decreasing fertility rates is clearly evident. The highest fertility rate in 1950 occurred in least developed countries with slightly increasing and then decreasing values converging to the replacement level of fertility. Decreasing fertility can be seen also in less developed countries, again converging to the replacement level. Different picture stays for more developed countries, their fertility rate is decreasing in the beginning far below the replacement, reaching the lowest rate of 1.56 during 1995-2000 period and then slowly increasing and converging to the replacement level. Similar image as for more developed countries holds for Europe, as there are largely more developed countries. Together the world fertility rate occurs in the middle between least and more developed countries, decreasing over time to converge to the replacement level.

3.5 Population growth

From all the components of the demographic transition, which we examined above, population growth rates can be constructed for countries. These rates give us a clear picture of variance of the demographic change.

Figure 3.4 Population growth rate 1950-2050

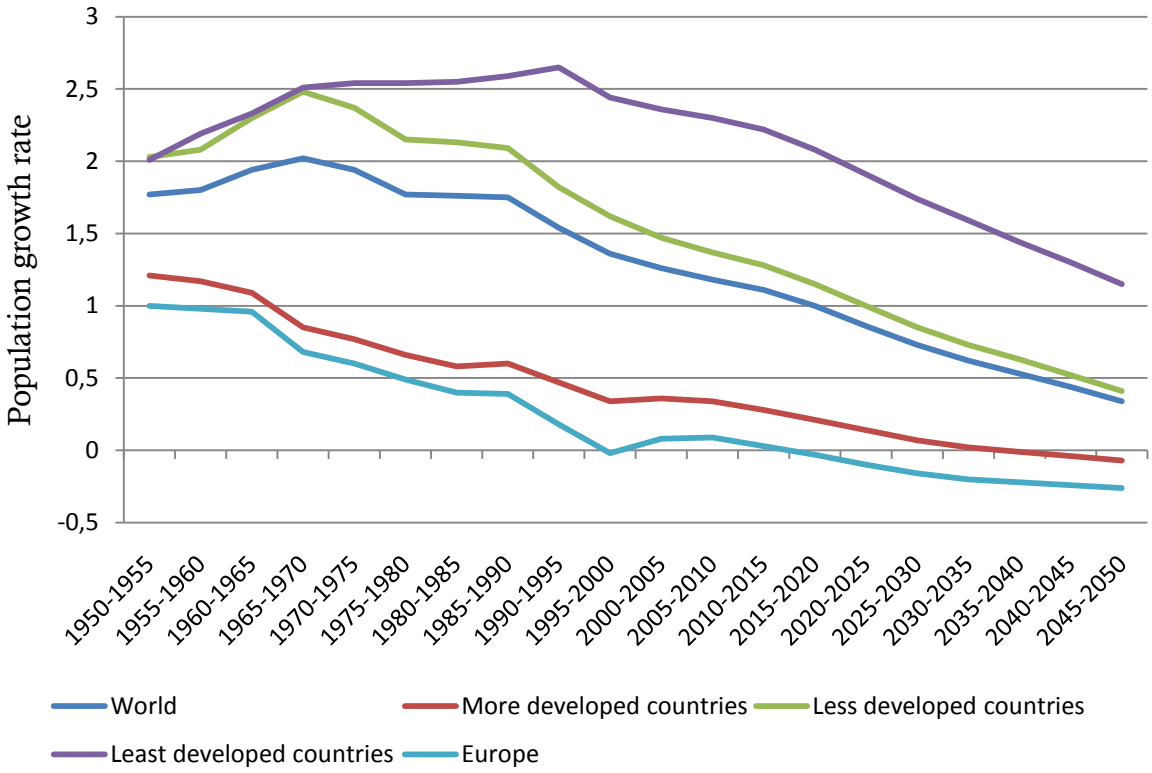

Source: Population Division of the Department of Economic and Social Affairs of the United Nations Secretariat, World Population Prospects: The 2008 Revision, http://esa.un.org/unpp

From the description of the demographic transition, population growth should rise at the beginning, gain maximum at point, where mortality reaches its lowest level and fertility still did not adjust, and then, as fertility would be adjusting, population growth should diminish. Upon this idea, we can see from the graph, that least developed countries reached the maximum population growth as far as in 1990-1995, indicating the latest demographic transition. Less developed countries obtained their maximum population growth in period 1965-1970, whereas more developed countries and Europe experience decreasing population growth in the whole period 1950-2050, which indicates that the peak of their demographic transition occurred earlier. The World population growth has also reached its maximum in 1965-1970 and then started to decrease at a slightly slower pace than less developed countries, converging to their values at the end of examined period.

Another interesting fact which we can deduct from this graph is comparison of values of population growth rates. Over the whole period, the highest population growth occurs in the least developed countries, resulting in more than threefold values of the world population growth. Less developed countries had initially almost identical progress of population growth as least developed countries but since 1965-1970 their population growth declined and is projected to decline even more to the final value, which is almost the same as the world's. More developed countries had decreasing population growth over whole period, as we have mentioned, according to the projection, their population growth should reach zero around 2030 and then be negative, indicating shrinking populations of more developed countries in the world. Interesting progress of population growth can be seen in Europe, which is copying the trend of more developed countries almost fully, except for the period 1985-2000, when population growth fell to negative values. Then Europe's population growth slightly increased above zero, but from 2015 it is projected to be declining even more below zero.

3.6 Net migration

Another source of population change of country is a migration. As people move between countries they also influence the population. Migration happens for several reasons such as economic situation, social situation or war conflicts of a country. The important role of migration for our analysis is the effect on the population as it can partly substitute population growth.

Figure 3.5 Net migration rate 1950-2050

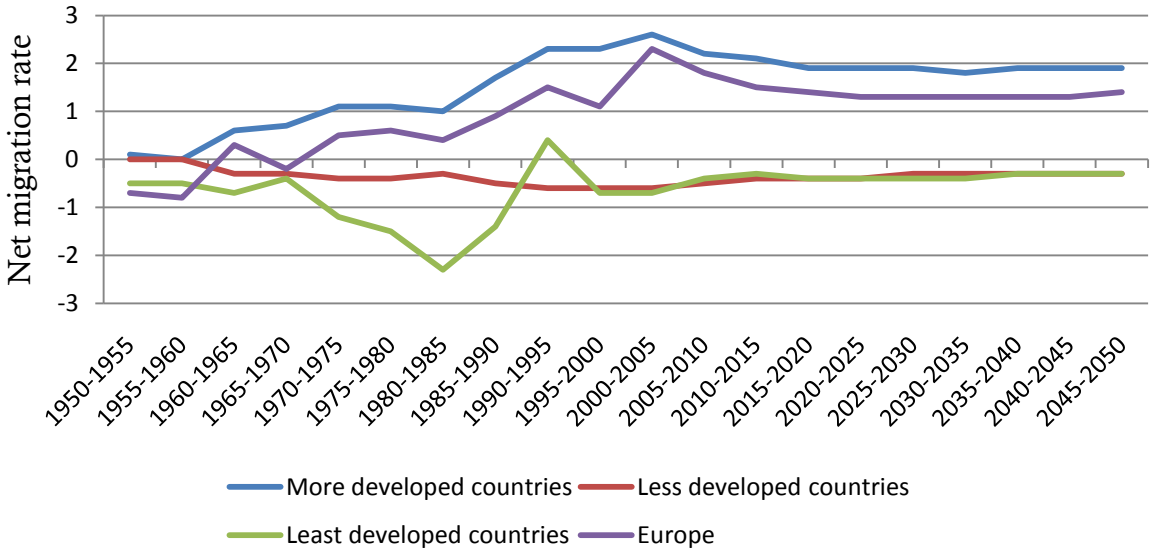

Source: Population Division of the Department of Economic and Social Affairs of the United Nations Secretariat, World Population Prospects: The 2008 Revision, http://esa.un.org/unpp

As we mentioned, economic situation of a country is one of the cause of migration. For this reason, the net migration of the least developed countries on our watched period is negative for nearly the whole period with the highest value of -2.3 (negative migration) in 1980s. The negative values of net migration rate suggest us the willingness of people to move to another country, but what is more important for us, the shift of the part of the population growth, which appeared to be positive, outside of the country. Similar situation happened and is projected to happen in less developed countries, where net migration rate stays negative from 1960s, suggesting again the shift of the part of the population growth to another country. We find a different situation in more developed countries, where net migration rate did not reach negative values, and actually we can see a rising trend in the data in period 1955-2005. Slightly different picture refers to European historical data, where net migration rate was negative from the beginning but after 1970s it remains positive. The situation of the more developed countries and especially Europe is reflecting the reason already mentioned. The situation in more developed countries and Europe was better, compared to the less developed countries and therefore, the net migration rate was positive and is projected to stay positive.

3.7 The demographic transition

On the last few paragraphs we could see the variance of timing and size of demographic transition. The population growth rate and net migration rate revealed to us the timing of the demographic transitions over our group of countries, whereas the size of the impact of the demographic transition was not so obvious from the previous paragraphs.

The change of the age structure of population describes the processes, which happens in different groups of countries more precisely, and therefore, the size of the demographic transition and its impact on economy can be explained better by the age structure analysis.

Figure 3.6 Age structure 1950-2050

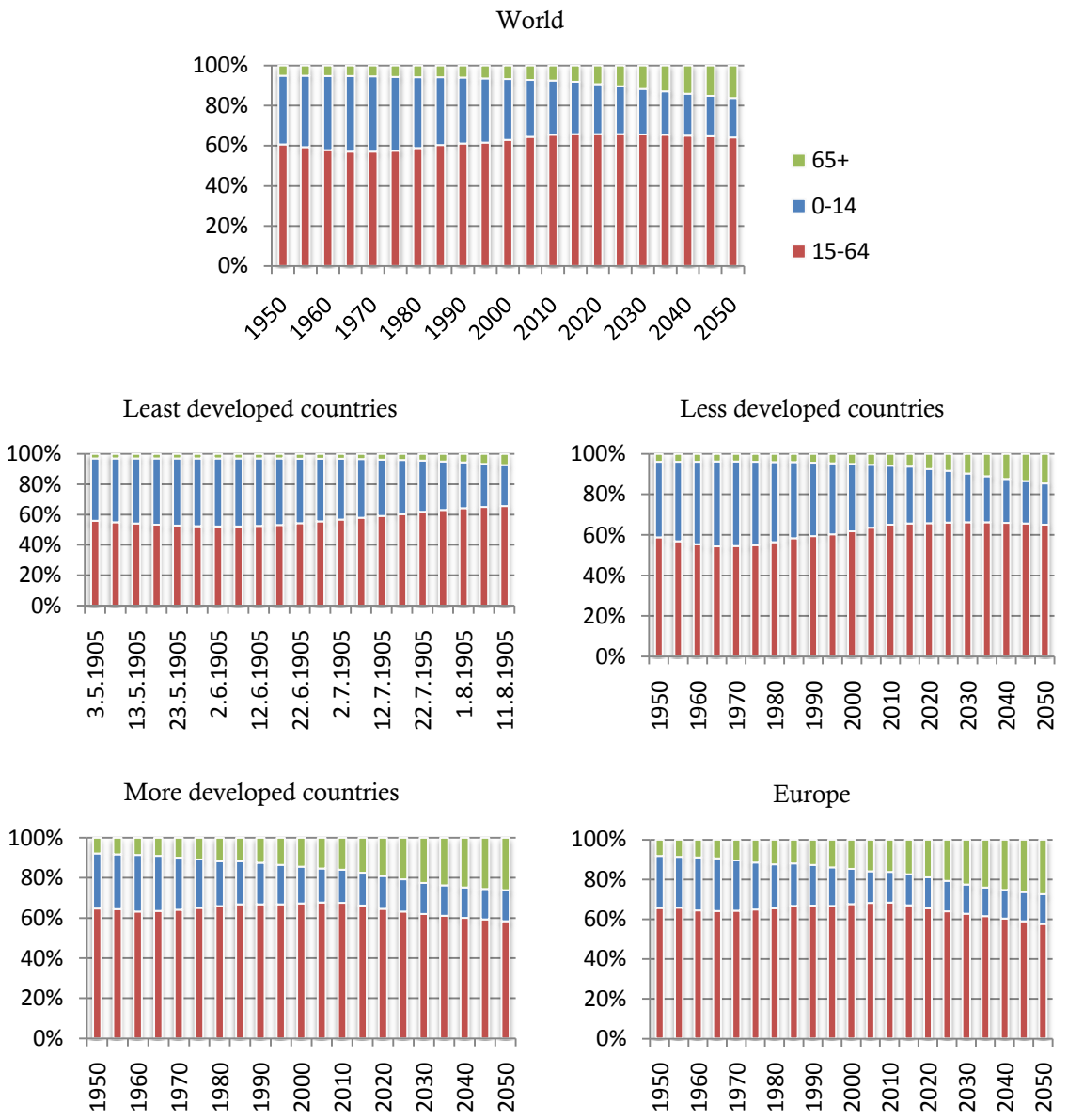

Source: Population Division of the Department of Economic and Social Affairs of the United Nations Secretariat, World Population Prospects: The 2008 Revision, http://esa.un.org/unpp

The world is going through a demographic change during which the youngest part of population reached its maximum of 37.7% in 1965, during the peak of the difference of fertility and mortality. After that, young part of the population has been slowly shrinking and is projected to reduce even more to the value of 19.6% in 2050. As young population progressed to the productive age, the values for the productive part of population have been increasing and are projected to rise to its maximum of 65.8% in 2015 and then slowly decrease. The life expectancy is projected to increase and it can be seen also on the rising trend of old participation in the world's population.

The situation in Europe is quite different. The young represented 26.7% of Europe population, which was the maximum level in 1960s. Thereafter, the percentage of young

in the population has been declining and is projected to decline even more to a minimum level of 14.4% in 2035. A small uprise is projected after 2040s, leading to 15% of young in Europe in 2050. The productive part of Europe's population was increasing, reaching the maximum value of 68.3% in 2010. Estimated decline to the value of 57.6% is indicating the population aging in Europe. This trend is most significant on the percentage of old in population, which is increasing through the whole watched period from 8.2% to the final value of 27.4% in 2050.

The most visible differences of the size of demographic transition around the world can be revealed by the comparison of countries on different stage of development. In 1950s the young represented 41% of population in the least developed countries and 37.3% in the less developed countries, whereas the more developed countries had only 27.4% of young in population. The maximum value of 28.1% of young in population was reached by more developed countries in 1960s, while less developed countries recorded the most of young people 41.9% in the population later in 1965, whereas least developed countries reached the maximum as late as in 1985 with 44.9% of young. The demographic transition took place in all countries and falling fertility, due to new health conditions, had slowed down the population growth, which caused decreasing part of young in all regions. The young part is projected to represent 15.4% of population in more developed countries, 20.3% of population in less developed countries and 27% of population in least developed countries in 2050.

As the increased population growth helped to increase the young part of population, the productive part of population had reached its minimum of 63.3% in 1960s in more developed countries, 54.3% in 1965 in less developed countries and 52.1% in 1985 in least developed countries. As population growth had slowed down with falling fertility, the productive part of population started to rise, until the effect of increasing life expectancy took place by increasing old part of population, gaining the maximum of 66.9% in period 1985-1990 in more developed countries, whereas the maximum size of productive part of population in less developed countries is estimated to be reached in 2030s by value of 66.3% of population. Least developed countries have naturally the worst health services, which induces a slowdown of the effect of increasing life expectancy and therefore the percentage of population in productive age is projected to rise in watched period.

We already mentioned the effect of increasing life expectancy which is causing the increase of old people in population due to longer lives. The similar increasing trend of part of the old in population is therefore evident in all countries, but the difference stays

in age structure. Whereas more developed countries started in 1950s with 7.9% and are projected to finish with 26.2% in 2050, the situation in less developed and least developed countries is different. Less developed countries remained with small part of old in the population not exceeding 5% in period 1950-2000 from initial 3.9%, then the population aging is estimated to reveal and end in 14.6% in 2050. In 1950s least developed countries had 3.1% of old people in population, with even later effect of population aging than less developed countries, which is projected to start to reveal in the end of watched period with final value of 7.4% of old in population in 2050, not exceeding 5% until 2040.

3.8 The demographic transition and economic growth

The age structure and population growth analyses have given us an overview of the current situation of the demographic transition. There are big differences in the timing and size of the demographic transition over the countries, which indicate the variance of the consequences. For the rest of this thesis, we will focus on the impacts of demographic transition on economic growth.

Economic demographers constructed an indicator, which records the demographic transition in other dimension (age structure), than commonly used population growth, the **age dependency ratio (ADR)**.

$$\boldsymbol{ADR = \frac{P_{15} + P_{65}}{P_{15-65}}}$$

P_{15}…population under 15 years

P_{65}…population over 65 years

P_{15-65}…productive-age population between 15 to 65

This ratio shows how many 'dependents' there are for each person in the 'productive' age group (Birdsall, Kelley, Sinding; 2001). This variable is important for our analyses, because of the correlation of economic growth and labor force. From the construction of the variable, we can easily see, that the smaller the ADR is, a bigger part of population is available to be the part of labor force. The larger the ADR is, a bigger part of population have to be fed by the productive population.

Figure 3.7 Age dependency ratio 1950-2050

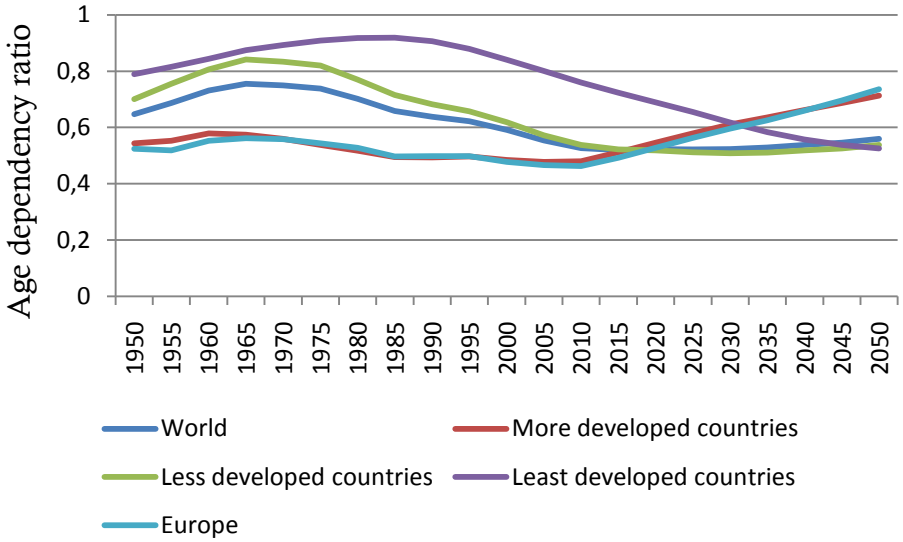

Source: Population Division of the Department of Economic and Social Affairs of the United Nations Secretariat, World Population Prospects: The 2008 Revision, http://esa.un.org/unpp

We examined the ADR index for the countries used in our previous analyses and the results show following implications. The demographic transition is evident on the graph, increasing ADR during population growth, then slower decrease caused by aging youth to productive age, and increasing ADR after the larger generations mature through the productive age and increase the old population. The demographic transition in least developed countries is the latest one, reaching the peak of the first stage in 1985 and thereafter slow decreasing through watched period. Less developed countries reached maximum ADR in 1965 and are projected to reach minimum ADR in 2030. The situation in more developed countries and Europe is almost the same, passing through a small increase of ADR finishing in 1960s, then decreasing in slow pace until 2010 and then rapid increase of ADR, caused by population aging, is projected.

The reason for using the age dependency ratio is a correlation with the labor force. The denominator is population in productive age, which is available for labor and since part of the production function is also labor, economic growth can be influenced by this way. The mechanism of how exactly the population change affect economic growth is not present in literature, whereas a lot of empirical studies were made to emphasize the role of population in economic analyses and to find the relationship between population and economic change.

3.9 The empirical studies

In historical part, we mentioned empirical studies made earlier, examining the correlation of population and economic growth. By the progress of revisionism and demographics, several relatively recent studies examined detailed correlation between population change and economic growth, employing not only the variable of population growth, but also variables of the age structure. For the purpose of this thesis, we prefer the studies of Jeffrey G. Williamson and David Bloom and David Canning as the most significant examples for the emphasis of the role of age structure in economic analysis.

3.9.1 Study of Jeffrey G. Williamson

3.9.1.1 Economic hypothesis

Williamson considers the changing age distribution as the most important factor of identifying the impact of demographic change. The work is build on hypothesis of diminished per capita income growth by large dependency burdens and small working-age adult shares in early stages of demographic transition, promoted per capita income growth by small dependency burdens and high working-age adult shares later as transition continues, denoted as 'economic gift', which evaporates as the old share rises at last. Author argues this process as the reason of changing per capita income growth in East Asia.

3.9.1.2 Simple Growth theory

The cross-country growth equations were estimated by Bloom and Williamson, based on a conventional Ramsey model. The derivation starts from the per capita income growth defined from Ramsey model as:

$$g_y = \frac{1}{T_2 - T_1} \log\left(\frac{y(T_2)}{y(T_1)}\right) = \alpha \log\left(\frac{y^*}{y(T_1)}\right).$$

The y in the equation is production per worker $y = f(k) = Ak^{\alpha}$ and the steady-state output follows the definition of Sachs, Radelet and Lee (1997) in form

$$y^* = X\beta$$

where X is the matrix of k determinants of steady-state output (e.g. life expectancy, measure of natural resource abundance, openness, etc.). The derivation from output per worker (y) to output per capita ($\tilde{y}$) goes like this, with L as labor and P as population:

$$\tilde{y} = \frac{Y}{P} = \frac{Y}{L}\frac{L}{P} = y\frac{L}{P}.$$

From this equation the growth rates are easily derived

$$g_{\tilde{y}} = g_y + g_{workers} - g_{population}$$

and by adding it together with the growth rate from Ramsey model and steady-state output, we can derive equation with added stochastic term:

$$g_{\tilde{y}} = X\beta_1 + y(T_1)\beta_2 + g_{workers}\,\beta_3 + g_{population}\,\beta_4 + \varepsilon$$

with theoretical $\beta_3 = -\beta_4 = 1$ identity. The impact of the demographic transition therefore depends on the stability of the population.

3.9.1.3 Econometric Results

Williamson used data from 78 countries (Africa 17, Asia 13, Latin America 21, MENA 5 and OECD 22) covering the period 1965-1990. On the first analyses he illustrated the common 'mistakes' of earlier econometric studies, focusing on the sign of the log of initial income. This way of analyzing the impact of demographic transition leaded to conclusions, that demography doesn't matter, forgetting to look at the sources of population growth and the stage of demographic transition.

The second analysis confirmed the original hypothesis by positive, statistically significant and big (1.46) coefficient on the working-age population growth rate and negative, statistically significant and also big (-1.03) coefficient on the population growth rate. The results show that, when the growth of the working-age population exceeds the population growth, higher per capita output growth appears in data, but also on other side, when the population growth exceeds the working-age population growth, per capita output growth is reduced.

At the end, Williamson agrees on the critique of his results, mainly because of macro orientation and the motivation of findings in life-cycle model. He denotes the conflict of micro data and life-cycle model as the main source of skepticism about the use of the results for policy decisions.

3.9.2 David Bloom and David Canning

The consequences of demographic change have been the major interest of studies by David Bloom and David Canning for more than a decade now. They have together published a number of books and articles dedicated to the effects of population change, which brought a lot of new insights into this theme. Their way of analyzing is revisionist, taking into account more dimensions of population change and also feedbacks. Their

main idea of the effects of population change is the emphasized role of the age structure of population in analyses of population impacts. As we already mentioned, they have wrote a lot of articles and books, our focus will be on the working paper from 2005 "Global demographic change: Dimensions and economic significance".

3.9.2.1 The motivation

The paper is focusing on the current stage of global demographic change and exploring the implications for macroeconomic performance. It is particularly focused to the problem of population aging, which starts to enforce in more developed countries.

3.9.2.2 Theoretical model

The authors use the model derived from income per worker growth, with initial income per worker z_0 and steady-state income per worker z^* with a speed of convergence marked as λ.

$$g_z = \lambda(z^* - z_0)$$

The steady-state income per worker is determined by the vector of factors X, and can be derived as $z^* = X\beta$. The income per worker growth can be expressed therefore in form

$$g_z = \lambda(X\beta - z_0),$$

which was discussed extensively also by Barro and Sala-I-Martin (1995). The aim of the analysis is to show income per capita growth, therefore the transfer from income per worker is made this way:

$$\frac{Y}{N} = \frac{Y}{L}\frac{L}{WA}\frac{WA}{N}$$

where L stays for labor, N for population and WA express working-age population. The middle component stays for the participation rate, which is assumed to be constant and therefore it implies the growth rates from previous equation in this form:

$$g_{Y/N} = g_{Y/WA} + g_{WA/N}$$

With the following substitution

$$y = log\frac{Y}{N}, z = log\frac{Y}{L}, w = log\frac{WA}{N}, p = log\frac{L}{WA},$$

authors derived the growth rate equation with assumed constant participation rate as

$$g_y = g_z + g_w$$

The final income per capita growth can be expressed as (since $y_0 = z_0 + p + w_0$)

$$g_y = \lambda(X\beta + p + w_0 - y_0) + g_w$$

This equation is similar to standard regression forms in analyzing economic growth with a range of variables, X, and the initial income per capita y_0. The assumed constant participation rate is captured in constant term of regression.

3.9.2.3 Results

The data used by Bloom and Canning accounts for period 1960-1995, observed every five years. The data used in regression contains GDP per capita, working age and total population, schooling, life expectancy, governance index (constructed by Knack and Keefer), percentage of land area in the tropics and country-specific variables.

They ran three regressions, where the first one was standard regression by OLS method with all the variables. In the second regression they took into account the fact that the growth of the ratio of working-age to population may be determined by the economic growth and therefore they used lagged value of this variable. The interaction between the degree of openness of the economy and the ratio of working-age to total population is another factor, which affects the results and therefore the third regression was made under this condition. What is important for us is that all three regressions showed the growth of the ratio of working-age to total population to be highly significant. These results confirm the idea of the important role of demography, especially age structure, in the analysis of economic growth.

4 THE MODEL

The problem of the evaluation of the direct impact of population change, as we could see on empirical studies, is difficult to solve, because of the ways in which population change influences economic aggregates. The findings of empirical studies vary depending on the type of country, time in history, economic conditions in country, etc. But some of them, due to new insight of the revisionism, unveiled important statements about population impact in certain conditions. As the original interest of this work was a discovery of the mechanism, which is behind the variance of empirical findings, in following part, we step by step tried to find the explanatory model to the complexity of the evaluation of impact of population change.

4.1 Cobb-Douglas production function

The Cobb-Douglas production function is commonly used in macroeconomic models. The function considers three sources of production – capital, labor and technology. Overal equation in general form is:

$$Y = AK^{\alpha}L^{\beta}$$

The output of the economy is determined by the size of capital and labor and their proportion. Capital A states for productivity factor, which is dependent on technology in economy. By this equation, economists can obtain potential theoretical output of the economy, which is used in macroeconomic models.

The proportion of capital and labor in overall output is expressed by α and β. Their sum explains the state of the economy:

$\alpha + \beta = 1$ … constant returns to scale of the production function

$\alpha + \beta > 1$ … increasing returns to scale of the production function

$\alpha + \beta < 1$ … decreasing returns to scale of the production function

As the commonly used Solow economic growth model does, we would claim the constant returns to scale of the production function. Therefore both factors of production, labor and capital, have diminishing returns and by that point, we can express the relation between labor and output by this graph.

Figure 4.1 Cobb-Douglas production function for labor force

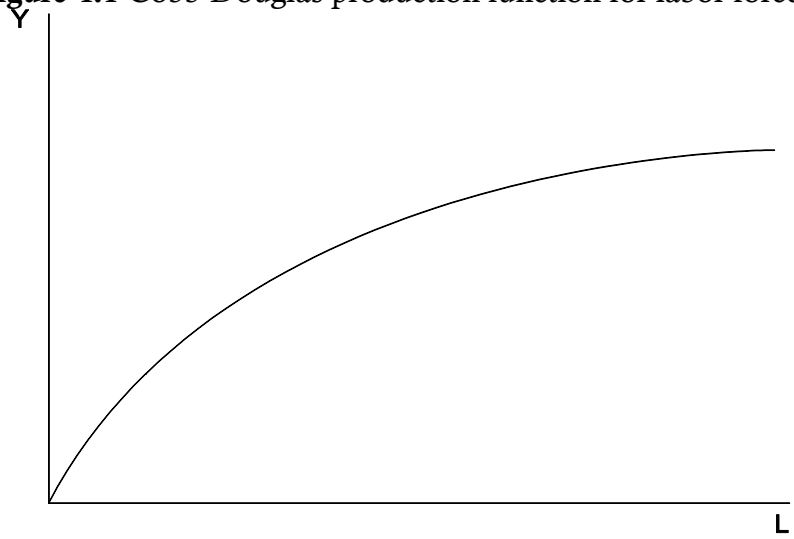

As we can see, diminishing returns are evident. As the overall production function depends only on three factors, we can straightly deduct, that there is no correlation between population and output, other than by labor force. Since this statement is true, we can extend the upper graph with third dimension which would be the population. Situation looks like this:

Figure 4.2 Cobb-Douglas production function for labor force with population

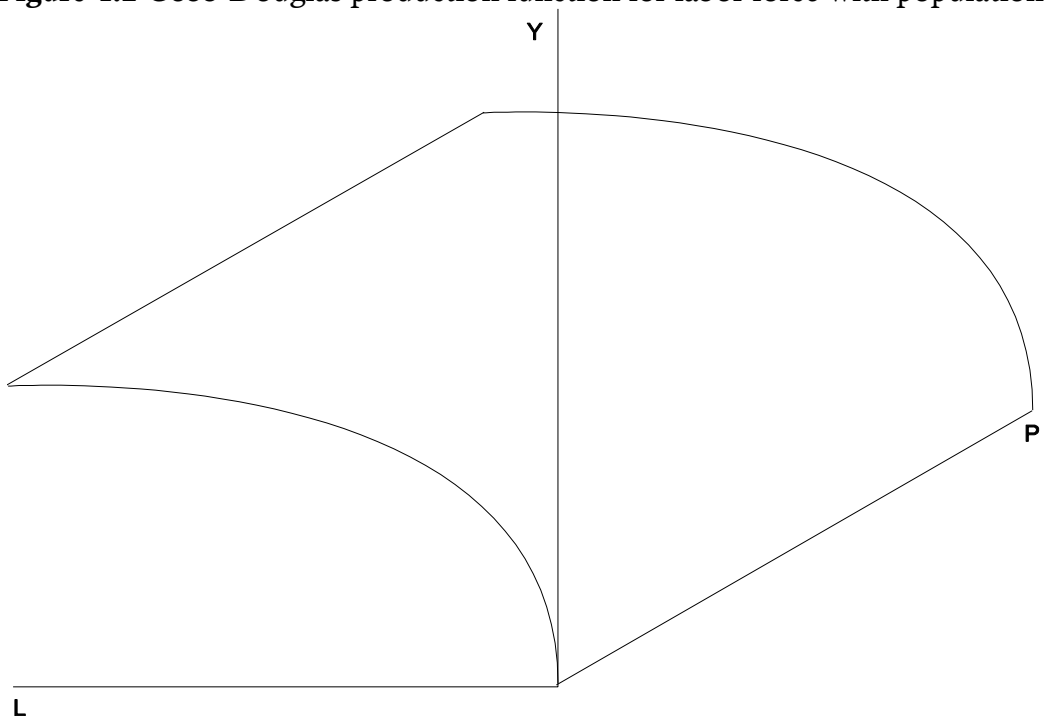

4.2 Consumption and subsistence consumption

The Solow economic growth model assumes that consumption in economy can be expressed as a part of the total output. Therefore the shape of the consumption function is same as the shape of production function.

Figure 4.3 Consumption function

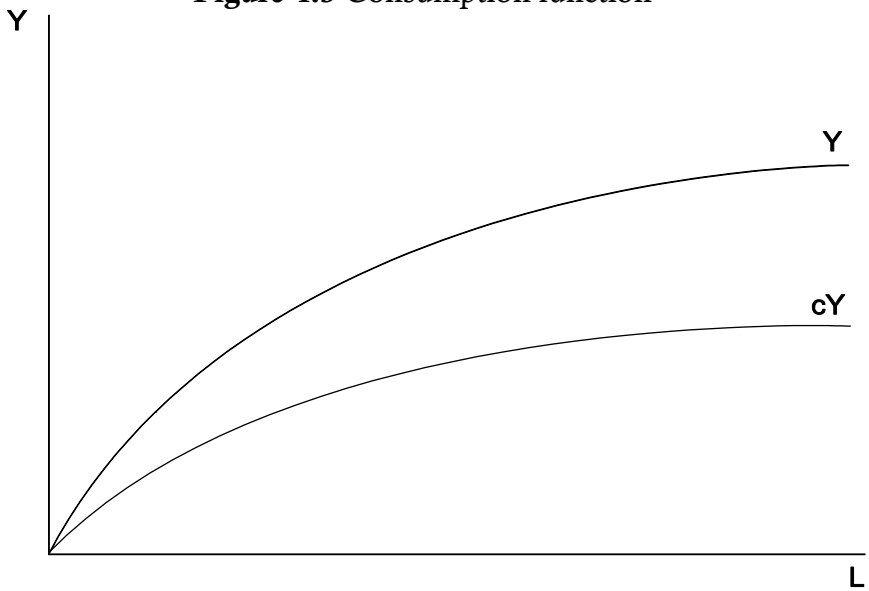

As this consumption function is considered to be empirically proven and there is not straight correlation with population, we would extend the idea of the consumption function with the subsistence consumption.

Subsistence consumption is the consumption which purely depends on the level of population. As every human has to consume some nutrition to survive, which is called subsistence level of consumption, the overall population, with all people consuming only the subsistence level, consume **the subsistence consumption**:

$$\boldsymbol{SC(P) = sc.P}$$

SC… subsistence consumption function

sc… subsistence level of consumption

P… the total number of population

Figure 4.4 Subsistence consumption function

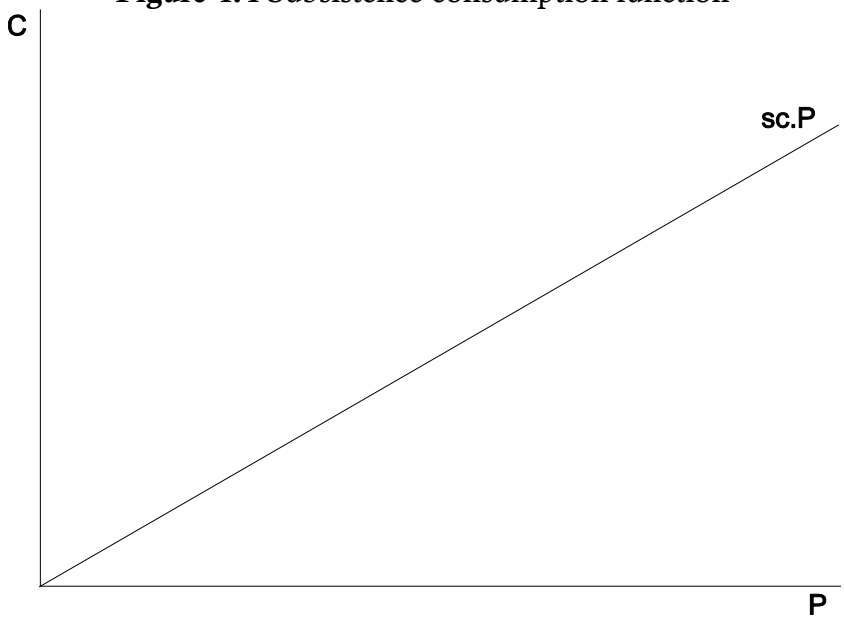

We can agree that these two consumption functions should be somehow correlated and by deriving the correlation, we should arrive at the consumption function, which depends on two factors: labor and population.

For the start, we would draw a graph with output and population on axis. As the production function and consumption function does not depend on population, these two variables are constants in the graph.

Figure 4.5 Consumption function with population

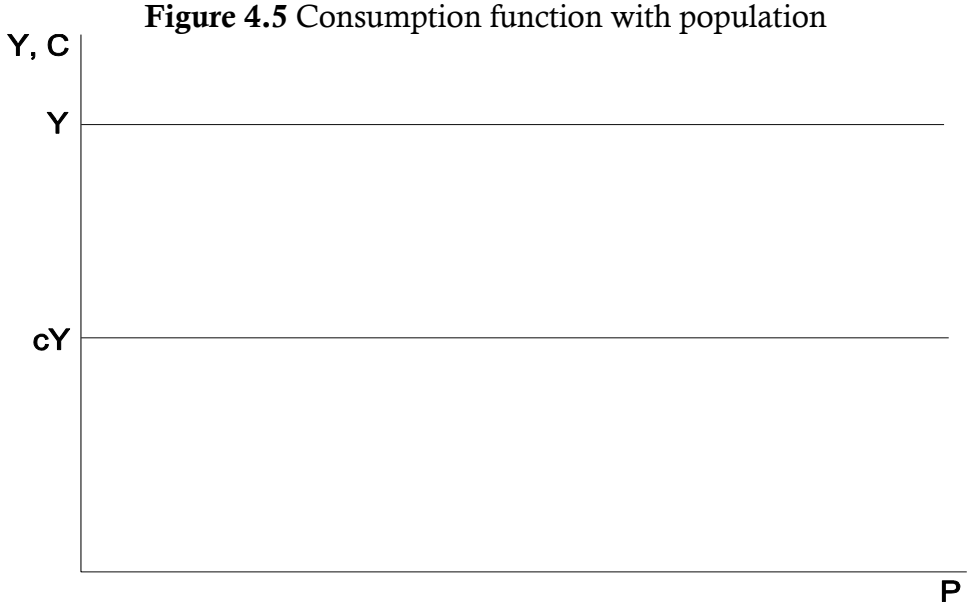

Now we can add our newly defined subsistence consumption function, which depends only on the level of population. As the subsistence consumption is increasing due to rising population, we arrive at the point, where the subsistence consumption cross the total output. This is the point, where the total output is fully consumed by population, which is consuming only the subsistence level of consumption. Another increase of

population would lead to gap between the consumption and output, what means that population would overgrow production, the original idea of Thomas Robert Malthus. We can therefore define new variable, **Malthusian population P_M**, as:

$$Y = SC$$

$$Y = sc.P_M$$

$$\boldsymbol{P_M = \frac{Y}{sc}}$$

Figure 4.6 Consumption and subsistence consumption function with population

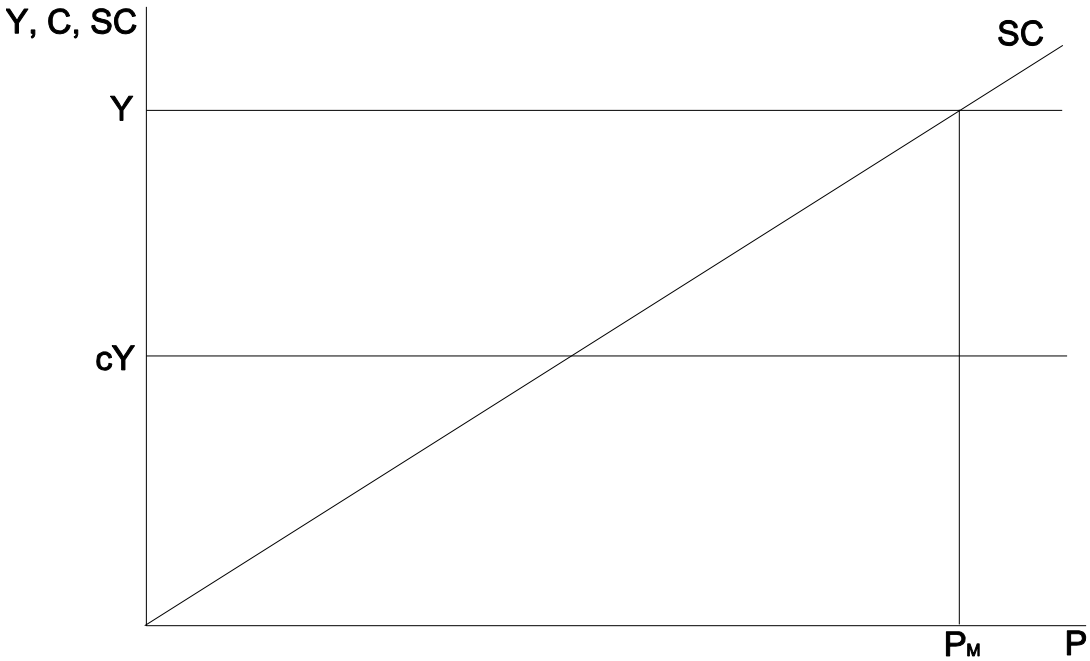

As we already mentioned, our interest is the correlation of consumption function and subsistence consumption function. We can realize that the consumption function of the growing population has to converge to the subsistence consumption function in population. As research is needed for the specification of this adjustment of the consumption function to the population level, we can derive a general form of the adjusted consumption function. We divide the adjusted consumption function into two parts: the original consumed part of the output and the part which is available for the subsistence consumption. The size of the second part is determined by a ratio between population and Malthusian population, the available part of total output and flexibility factor. The flexibility factor can be defined as a reaction function of adjusted consumption function to changes in the ratio of population to Malthusian population. This factor would gain any value, since we need research to make judgments, but we can imagine, that with ratio of population to Malthusian population almost equal to zero, the

reaction of the adjusted consumption function would be almost zero too. This implicate the statement, that in economies with large total outputs, which can support a much bigger population, the subsistence part of adjusted consumption function would be zero and therefore, the result of empirical studies of consumption function in large developed economies does not indicate any other part of the adjusted consumption function.

The formula for the **adjusted consumption function** can be derived as follows.

$$AC = c.Y + \varphi \frac{P}{P_M}(1-c).Y$$

$$AC = c.Y + \varphi \frac{P}{\frac{Y}{sc}}(1-c).Y$$

$$\boldsymbol{AC = c.Y + \varphi.P.sc.(1-c)}$$

AC… adjusted consumption

P… actual population

φ… flexibility factor

For the easier comprehensiveness we would use in our graphs linear convergence, with the flexibility factor equal to 1, to the cross of the subsistence consumption and the output level.

Figure 4.7 Adjusted consumption function

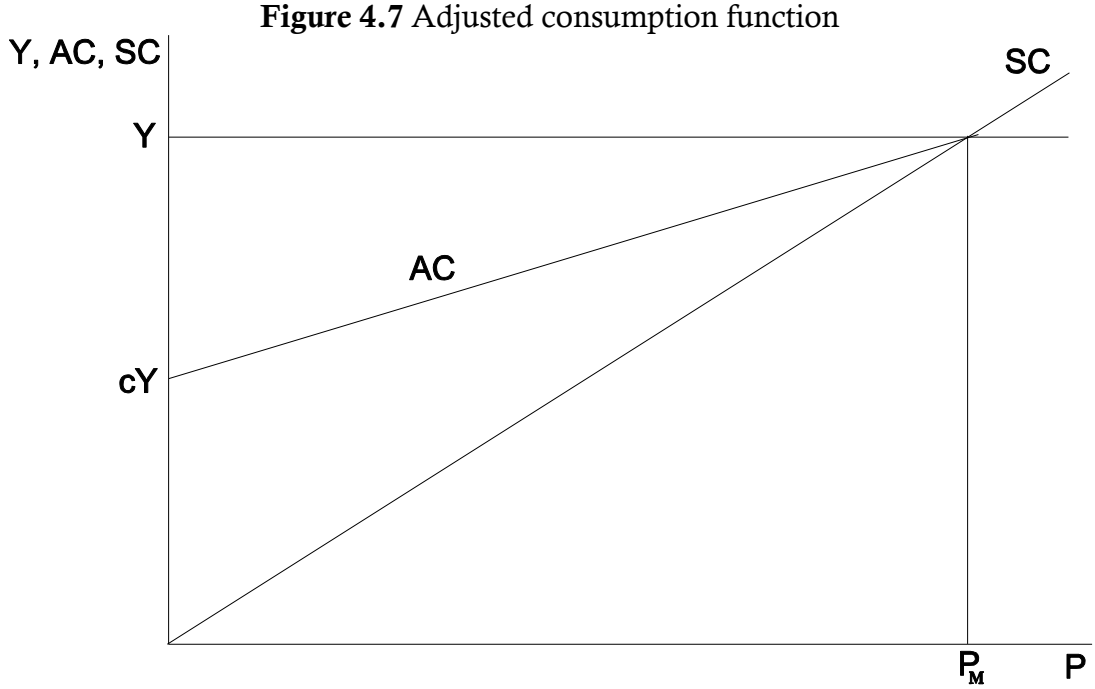

4.3 Labor and population

If we would like to examine the overall impact of population change, we have to take into account labor and population simultaneously. Beforehand we have to realize that the space where the change in the ratio of labor to population can occur is only one half of the quadrant, as we can see on graph.

Figure 4.8 Labor and population ratio

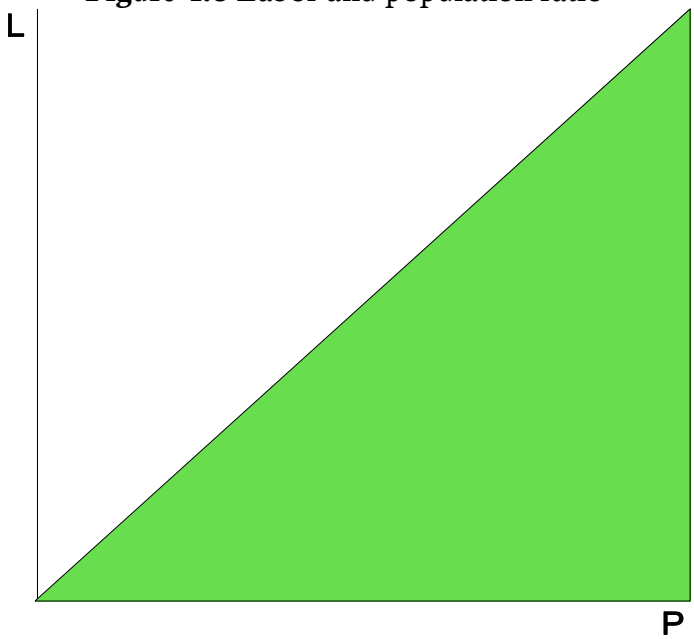

This idea can be expressed as a constraint of labor to population ratio:

$$\frac{L}{P} \leq 1$$

4.4 The savings space

From the previous definitions we have all the important parts to settle the three dimensional graph, where the impact of population dynamics on savings is visible. We would use three dimensions: population, labor and output. Firstly we would add the subsistence consumption function into the 3D graph with Cobb-Douglas production function for the better illustration of the adjustment of the consumption function. This picture would reveal the line, which occur on the intersection of the production and subsistence consumption functions. The line moves above the Malthusian populations for different size of total output and therefore we can define it as Malthusian line.

Figure 4.9 Cobb-Douglas production and subsistence consumption functions with population

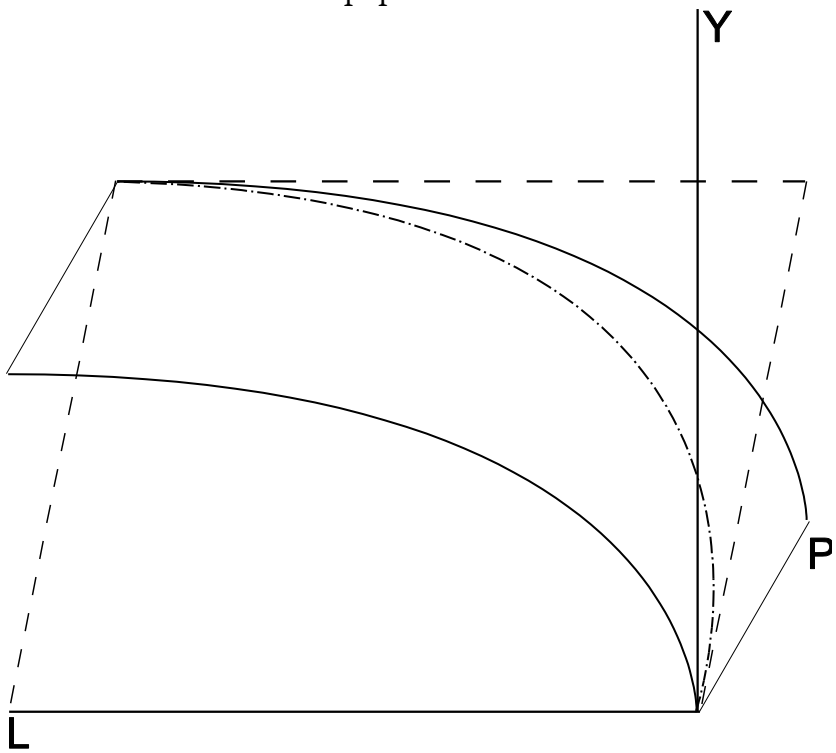

As the idea of adjusted consumption function was explained above, we can add it finally into the graph. Remember, for the simplification, we assume the convergence to be linear.

Figure 4.10 Cobb-Douglas production and adjusted consumption functions with population

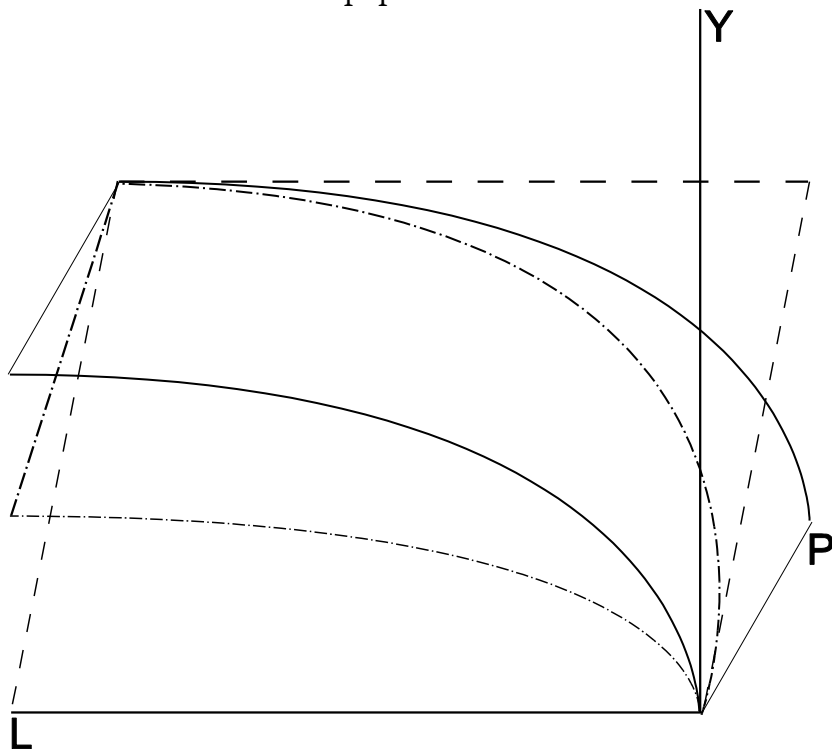

Final step, which would reveal the impact of the population on savings, is to clear the picture from inaccessible ratios of labor to population. This would cut half of the graph out and we finally obtain the three dimensional graph of savings.

Figure 4.11 Adjusted savings function

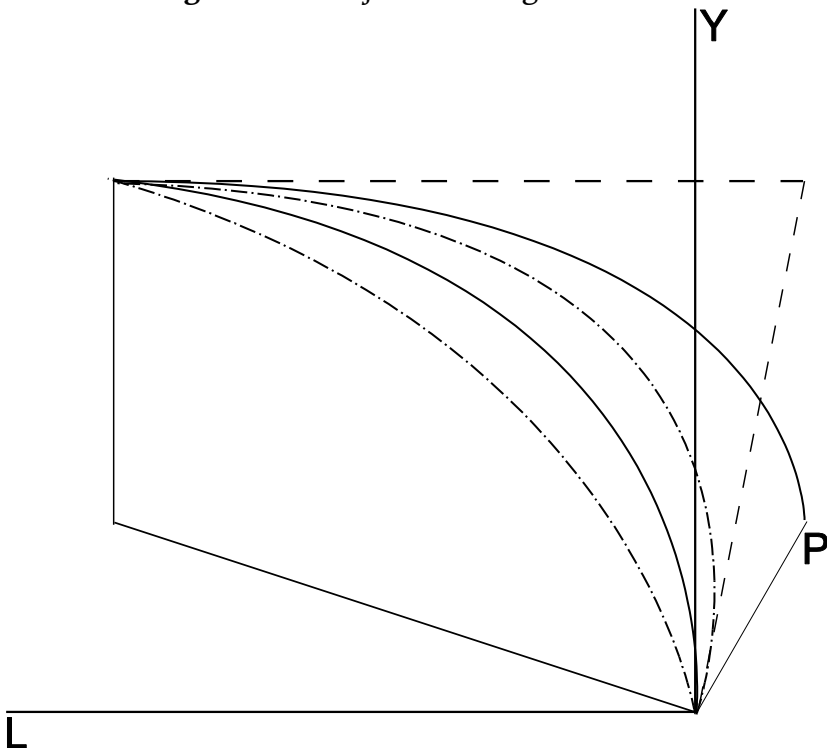

As in macroeconomic literature, savings are defined as a part of the output which was not consumed.

$$Y = C + S$$

Adjusted savings function derived by our model, as the space below the production function and above the adjusted consumption function, would depend on three variables: labor, capital and population.

$$AS = Y - AC = Y - c.Y - \varphi.P.sc.(1 - c)$$

$$AS = Y(1 - c) - \varphi.P.sc.(1 - c)$$

$$\boldsymbol{AS = (1 - c)(AK^{\alpha}L^{1-\alpha} - \varphi.P.sc)}$$

This definition of adjusted savings function is the intermediate between population growth and economic growth induced by capital investment. As we have defined the adjusted consumption function and the savings function, we can continue to build a growth theory based on these functions, which takes into account population effects.

4.5 Economic growth as interaction of the labor and capital growth

In next part, we would examine separately the parts of the Cobb-Douglas production function and their interactions. For that reason we need new instruments which would help us to understand the problem of population impact better.

We define "**isocapital production function**" as a function of labor with given amount of capital. Output is determined only by labor since capital is considered to be given.

$$F(\bar{K}, L) = f(L) = A\bar{K}^{\alpha}L^{1-\alpha}$$

Figure 4.12 Isocapital production function

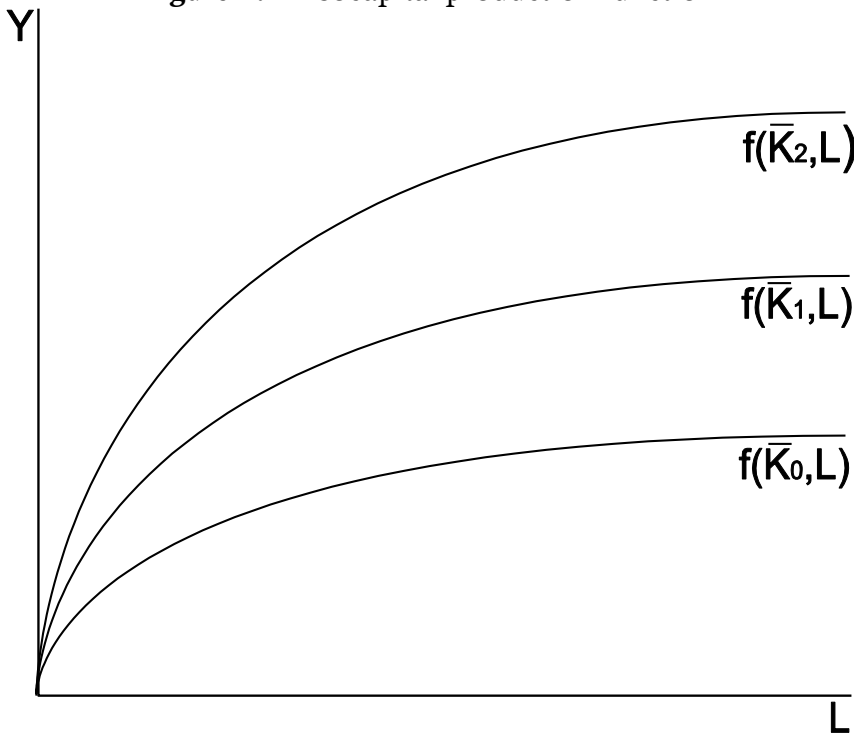

Next step, we define "**isolabor production function**" as a function of capital with given amount of labor. Here, output is determined by the amount of capital with given amount of labor force.

$$F(K, \bar{L}) = f(K) = AK^{\alpha}\bar{L}^{1-\alpha}$$

Figure 4.13 Isolabor production function

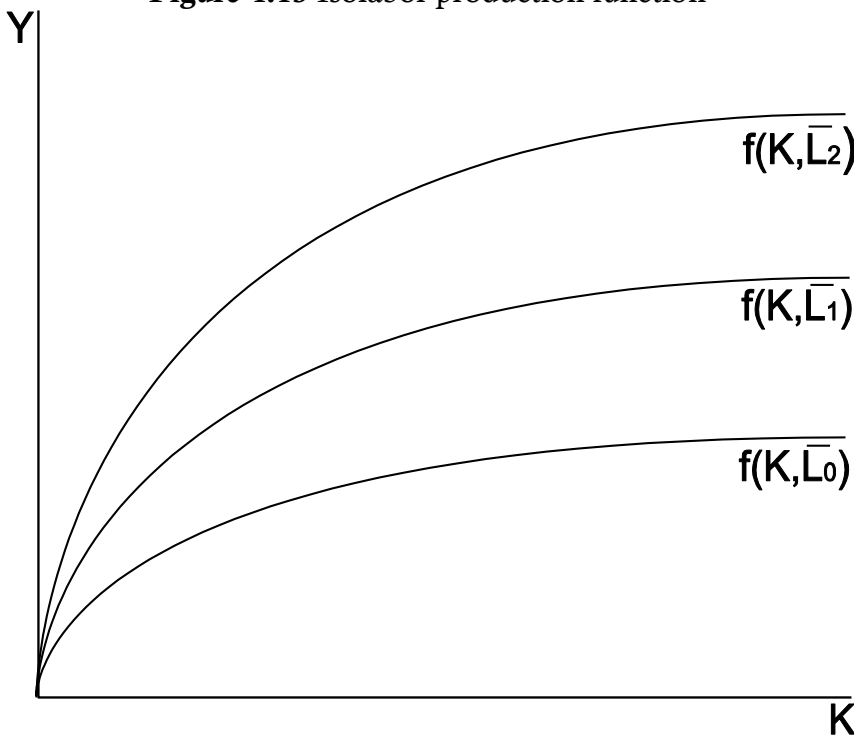

The interaction between these two functions is dynamic and each of them influences the other one. As labor force growth appears, total output would shift right on the isocapital function and by this act increase of the isolabor function upwards would happen. In opposite direction, the same happens as the capital growth would bring an output shift to right on the isolabor function and upward shift of the isocapital function.

This interaction between two production function is the key for understanding the impact of the population change and as we have defined them, we can continue to build a theory of population impact in next part.

4.6 Economic growth theory

The original Solow economic growth model considers the difference between investments and capital appreciation as the source of economic growth. We would also start at this point.

In general, macroeconomic identity is held, investments are equal to savings.

$$I = S = sY = (1 - c)Y$$

As we have defined our own adjusted savings function which depends on labor, capital and population, we can rearrange this equation for the purpose of our economic growth theory.

$$I = AS = (1 - c)(AK^{\alpha}L^{1-\alpha} - \varphi.P.sc)$$

The total depreciation in original Solow economic growth model rises from capital depreciation, population growth and new technology. Here we have to change the original idea of Robert Solow, because he worked with total output per labor, which in our case is not the same as population and therefore we would substitute the population growth with **labor growth,** marked as l. The capital change for Solow economic growth model would be therefore derived as:

$$\Delta K = sY - (\delta + g + l)K$$

And finally, we can rewrite the whole equation of capital change from Solow growth model with our adjusted savings function and new depreciation function.

$$\Delta K = (1 - c)(AK^{\alpha}L^{1-\alpha} - \varphi.P.sc) - (\delta + g + l)K$$

When we look closer to the equation, we should find out that capital in this equation is given from previous periods and therefore, the Cobb-Douglas production function can be substituted by isocapital production function, which we defined above. The final equation is therefore:

$$\Delta K = (1 - c)(A\overline{K}^{\alpha}L^{1-\alpha} - \varphi.P.sc) - (\delta + g + l)\overline{K}$$

$$\Delta K = (1 - c)(F(\overline{K}, L) - \varphi.P.sc) - (\delta + g + l)\overline{K}$$

$$\boldsymbol{\Delta K = (1 - c)(f(L) - \varphi.P.sc) - (\delta + g + l)\overline{K}}$$

This form of capital change gives us exact explanation of the impact of population change. Labor growth would induce a shift on isocapital production function and increase output and therefore savings, which would induce another growth from higher capital change. In other side, population growth could decrease savings, determined by flexibility factor, and therefore less capital change would appear. These two effects of population change are described in more details below.

4.7 Population change

As the population growth does not immediately influence output, but it does influence consumption, it could have an immediate effect on savings.

$$P_1 > P_0$$

$$AS_0 = (1 - c)(AK^{\alpha}L^{1-\alpha} - \varphi.P_0.sc)$$

$$AS_1 = (1 - c)(AK^{\alpha}L^{1-\alpha} - \varphi.P_1.sc)$$

$$AS_1 \leq AS_0$$

Figure 4.14 Savings adjustment to population growth

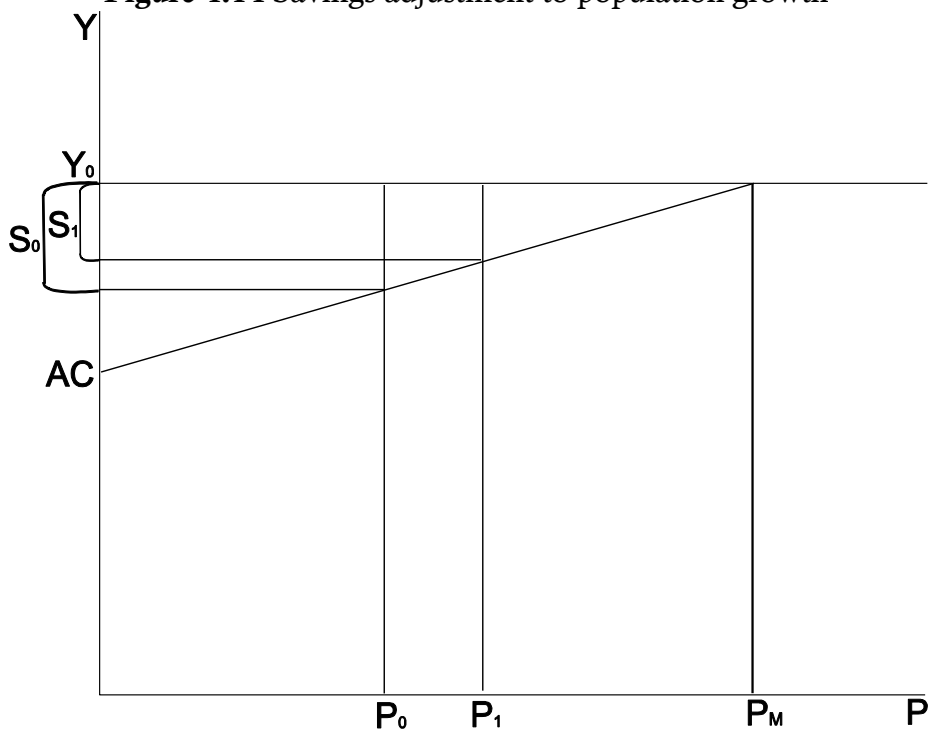

As savings could decline but depreciation level stays the same, economic growth induced by capital change could also decline due to population growth.

$$AS_1 \leq AS_0$$

$$\Delta K_0 = (1-c)(A\overline{K}^{\alpha}L^{1-\alpha} - \varphi.P_0.sc) - (\delta + g + l)\overline{K}$$

$$\Delta K_1 = (1-c)(A\overline{K}^{\alpha}L^{1-\alpha} - \varphi.P_1.sc) - (\delta + g + l)\overline{K}$$

$$\Delta K_1 \leq \Delta K_0$$

Figure 4.15 Capital change adjustment to population growth

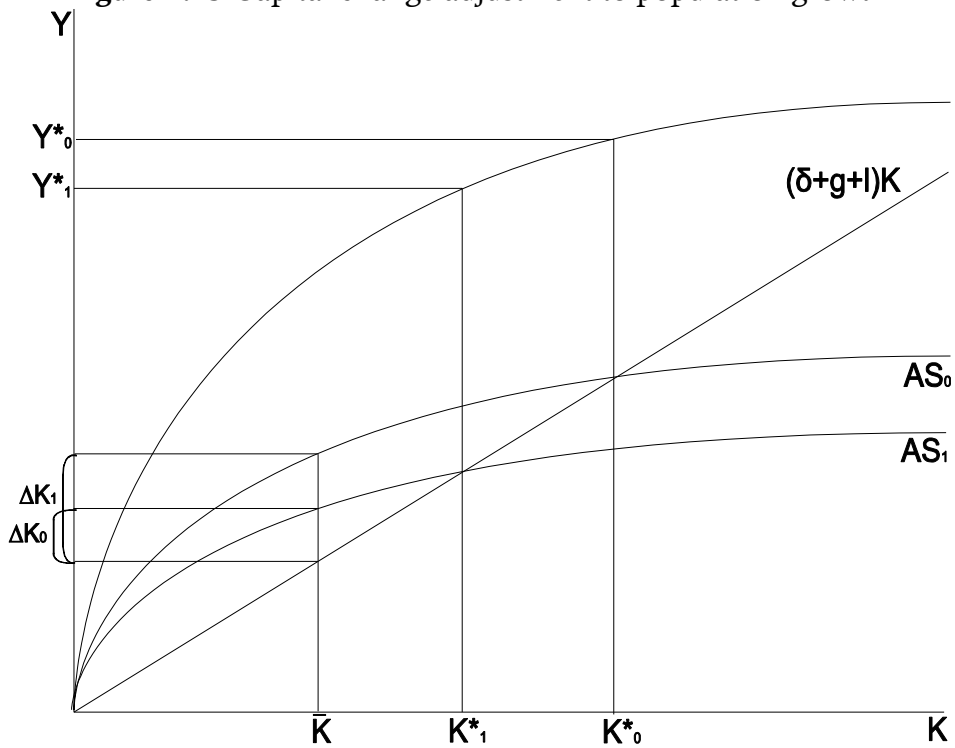

This relationship between population change and economic growth would mean that population change can have adverse effect on economic growth. The exact consequences of the population change would be therefore dependent on flexibility factor. As we have created the idea of flexibility factor, we outline the correlation with the relative wealth of economies.

In economy, where people have enough money to spend on another baby in their family, without decreasing their savings, consumption function would be constant with no reaction to population growth. Therefore it would have no effect on economic growth. In poor countries, where people live often on their survival limits, new babies would have enormous effect on aggregate consumption. Because parents do not have any spare money to feed their children and new children has to eat subsistence consumption to survive, population growth would have strong adverse effect on economic growth.

Opposite statement would take place for population aging, as population is shrinking, the adjusted consumption could be falling too and therefore more savings could appear for investments into capital.

Since research is needed for the specification of the flexibility factor, we cannot say that it is correlated only with the relative wealth of economies. More factors which would determine the flexibility factor could take place and therefore, we cannot specify the exact effect of population change.

In conclusion, we can only say that **population growth, with no labor change, has either no or negative effect on economic growth**. In other hand, **shrinking population with no change in labor force has either no or positive effect on economic growth**. These two implications can be easily seen on the three dimensions graph as a parallel shift to the population axis.

Figure 4.16 Adjusted savings function and population growth

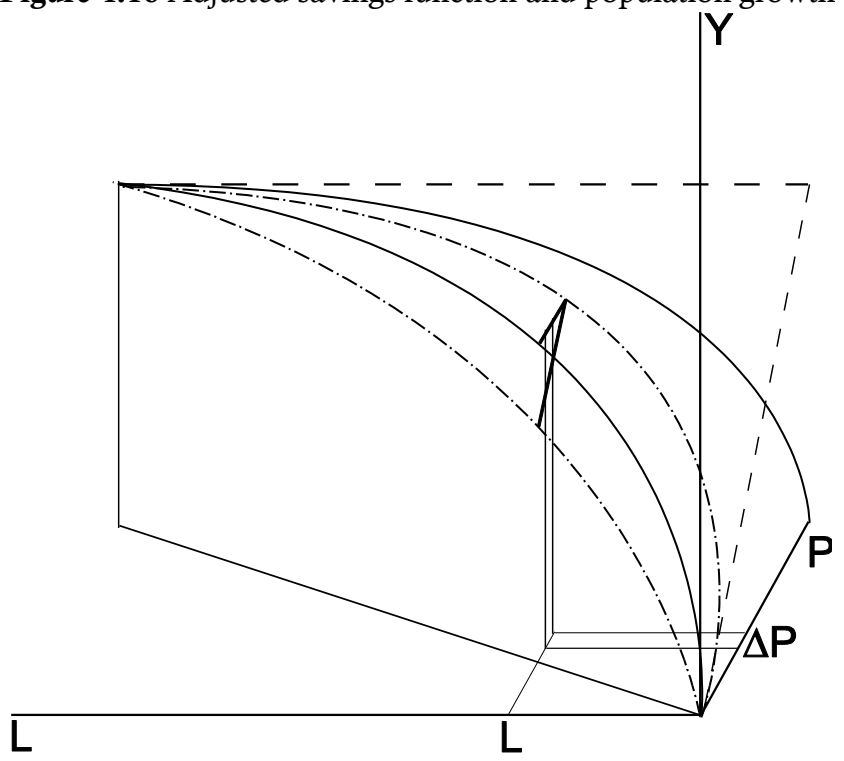

4.8 Labor change

The population change, as talked above, was only considered as a change of overall population with no labor change. In real life population change influences labor force too. There is a direct relationship between these two variables, since people in productive age are available to be the part of labor force. After period of population growth, as children grow and enter productive years of their lives, labor force is actually influenced by increasing working-age population. With more people in productive age, more labor, depending on the flexibility of labor market, is available for potential output and therefore, the initial population growth has direct effect on economic variables in long run. The mechanism of the impact of labor growth on economic growth is described below.

The initial labor growth would cause an increase of the potential output, due to Cobb-Douglas production function properties. In our terminology, we can talk about a shift on the isocapital production function, which would induce economic growth.

$$L_1 > L_0$$

$$(1+g) = \frac{f(\bar{K}, L_1)}{f(\bar{K}, L_0)} = \frac{A\bar{K}^{\alpha} L_1^{1-\alpha}}{A\bar{K}^{\alpha} L_0^{1-\alpha}} = \left(\frac{L_1}{L_0}\right)^{1-\alpha} > 1$$

Figure 4.17 Economic growth adjustment to labor growth

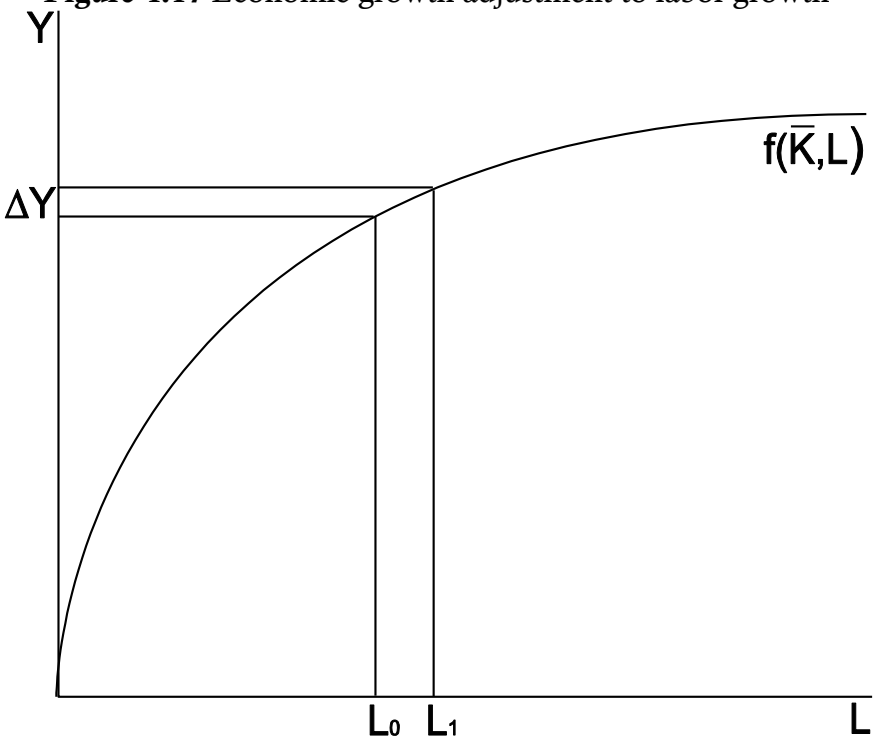

As this shift occurs, the interaction between isocapital and isolabor function happens, which causes the shift of isolabor production function upwards.

Figure 4.18 The shift of isolabor production function

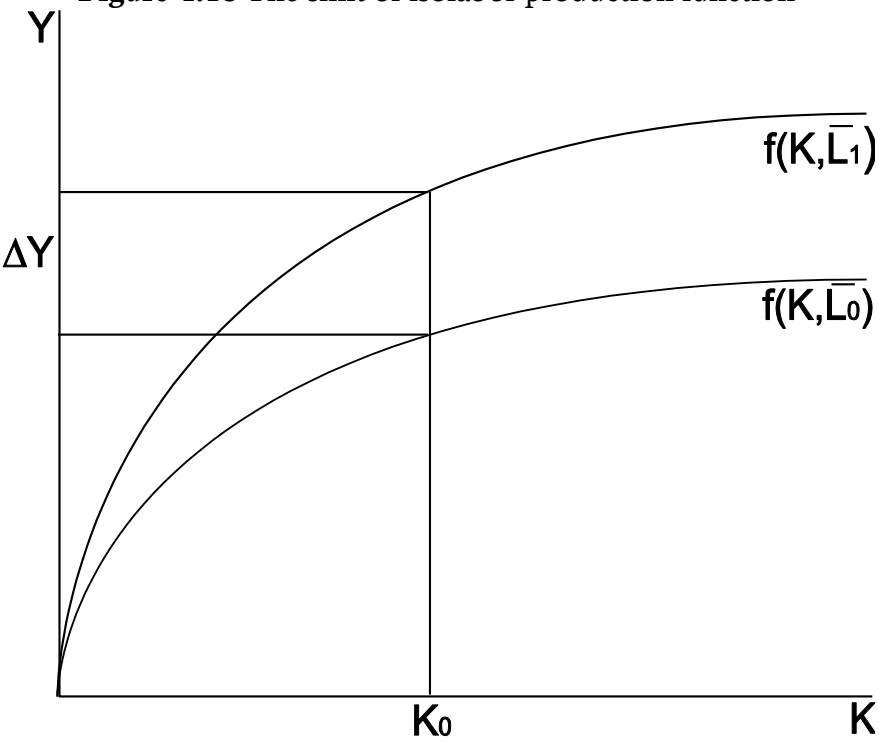

Hence the initial labor growth would increase potential output directly in short run, but what about the consequence of the shift of isolabor production function? As potential output grows, the adjusted savings function and the depreciation increase

simultaneously. From the detailed analyses, whether induced savings are higher or smaller than induced depreciation, we can derive the second effect of the labor change.

As we know, depreciation is a linear function of capital with coefficients: capital depreciation, technological growth and labor growth.

$$D = (\delta + g + l)K$$

If there is stable level of capital depreciation and no technological change, we can express the difference between depreciation with no and positive labor change as:

$$D_0 = \delta K$$

$$D_1 = (\delta + l)K$$

$$\Delta D = D_1 - D_0 = lK$$

Since we would like to derive some comparison, we have to express also the difference of the adjusted savings functions with no and positive labor change. We have already derived adjusted savings function, therefore the difference can be expressed as:

$$AS_0 = (1 - c)\left(AK^{\alpha} {L_0}^{1-\alpha} - \varphi.P.sc\right)$$

$$AS_1 = (1 - c)(AK^{\alpha}[(1 + l)L_0]^{1-\alpha} - \varphi.P.sc)$$

$$\Delta AS = AS_1 - AS_0 = (1 - c)\left(AK^{\alpha}[(1 + l)L_0]^{1-\alpha} - AK^{\alpha} {L_0}^{1-\alpha}\right)$$

$$\Delta AS = [(1 + l)^{1-\alpha} - 1](1 - c)AK^{\alpha}L_0^{1-\alpha}$$

From the comparison of these two differences, we can analyze whether labor change has positive, no or negative effect on economic growth in the second effect.

$\Delta AS > \Delta D$… labor growth has positive impact on economic growth

$\Delta AS = \Delta D$… labor growth has no effect on economic growth

$\Delta AS < \Delta D$… labor growth has negative impact on economic growth

Figure 4.19 Capital change adjustment to labor growth

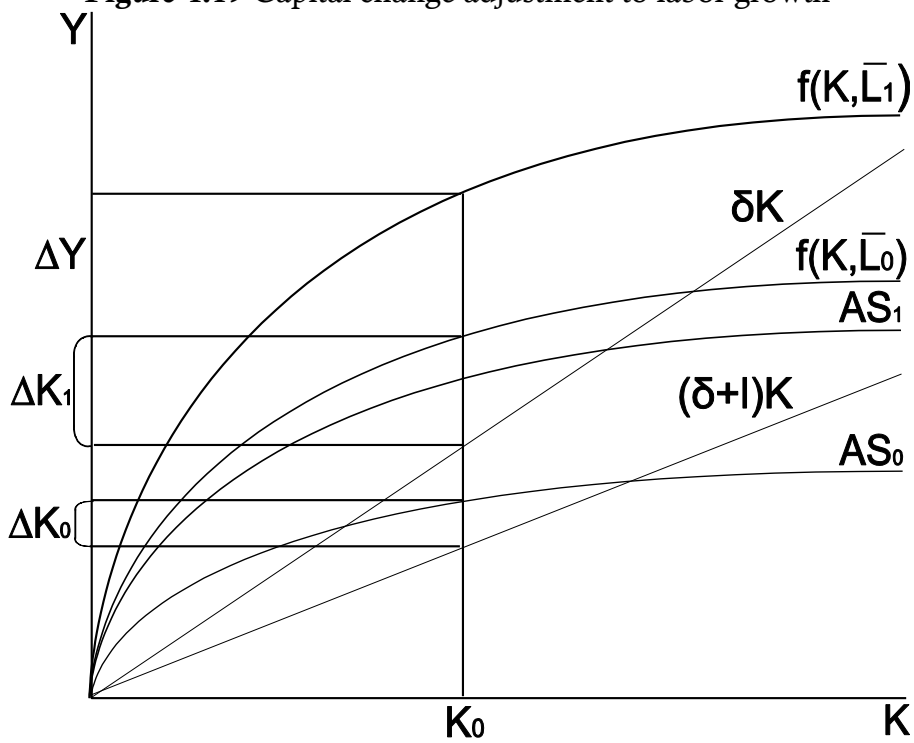

The double effect takes place under specific assumptions, which are rather restrictive, mainly because of the assumption about flexibility of labor market. In real life, population change has variable effects on labor change. It depends mainly on the flexibility of labor market, but also other factors are influencing the final outcome. Therefore, the only thing we can say about the population impact through age structure, is that **with no population change, in first effect working-age population growth has either no or positive effect on economic growth, whereas decreasing working-age population has either no or negative effect on economic growth**. The response of the capital market to savings would be crucial for the estimation of the second effect of labor change. The **working-age growth with no population change can have positive, no or even negative consequences on economic growth in second effect**, depending on the depreciation and savings functions.

In our three dimensional graph, we can imagine the labor change as a parallel shift to the labor axis, which causes the savings and output growth. The whole idea about the double effect is therefore evident on the picture.

Figure 4.20 Adjusted savings function and labor growth

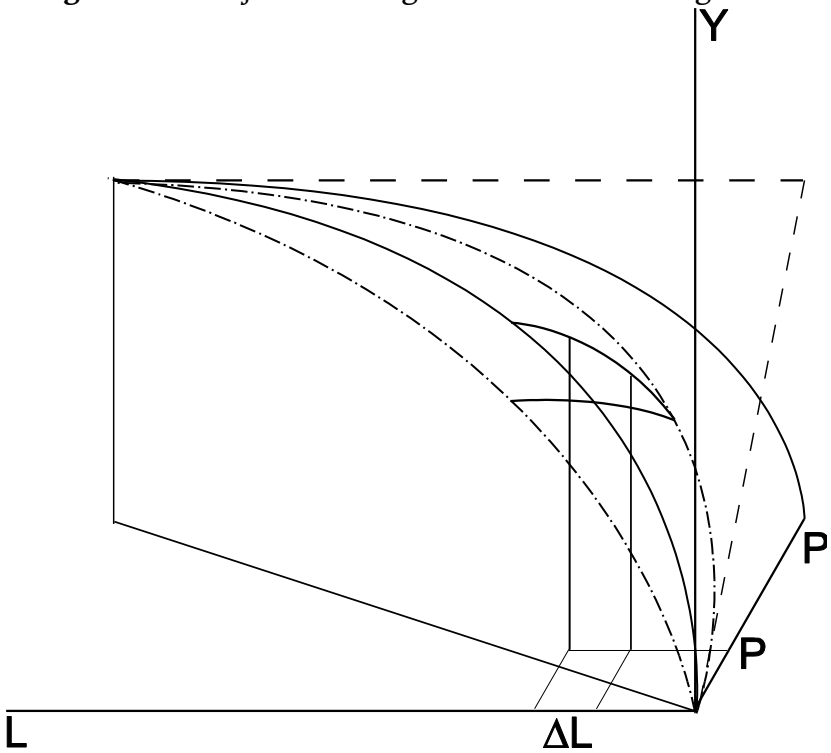

5 Conclusion

5.1 The empirical uneasiness

The history of the population economics is fully fated by the problem of the evaluation of the consequences of the population change. The two ways of the population impact, through population growth and age structure, gives a light in this problem and provides a possible explanation for economic analysis. Our model carefully works with the idea of these two ways and tries to involve them into the theory of economic growth.
Every economic model has to be proven by empirical results. This model however skirmish with the problems of the evaluation already as a theory. The two ways of the population impact can have opposite impacts on economic growth and in addition the size of the impact is also hard to estimate. The empirical studies of this model would therefore involve a spectrum of the evaluation, of which many need a separate empirical studies. Good example is the adjusted consumption function, which properties need to be discovered. The uneasiness of the empirical proof of this model is therefore evident on the structure of the model, which consist of three effects of population change: population growth effect, working-age growth effect on labor and labor effect on capital change.

5.2 The reality of feedbacks

As we mentioned the uneasiness of the empirical proof of population impact, we should at least get it closer to reality to show that the mechanism of the model can be correct. The population growth, as increased number of births, has various effects on the consumption function of the households. The reaction of families with income surpluses can be various. The family can decide not to increase their consumption and to move some part of the consumption of other members of family to the consumption of new baby. In other hand, family members can keep their consumption levels and in this case new baby has a negative effect on family savings. The resulting impact of the population growth would therefore depend on the reaction of families and financial situation of the families.
Population growth can have also another hidden effect on economic growth- maternity leave. The work, which is therefore not done by new mothers, is therefore missing in

companies. But as their jobs can be substituted by some sort of part time jobs, the impact of this effect is very relative.

As children will grow and become a member of working-age group of population, their impact on the labor force can be also various. In the countries, with high education level, the newly members of the working-age group would be high educated persons ready to work and to bring high yield for their employer, because of their knowledge. In other countries with lower level of education, newly members of working-age group of population are also ready to work, but with lower yields for their employers. The level of education is therefore another possible variable of the impact of population change on economic growth.

The working-age population has also various effects on labor. We mentioned that it depends on the flexibility of the labor market, but also other variables take place. As Cobb-Douglas production function has three sources of the growth, increasing labor force can have bigger effects in combination with supported growth by other sources. As the demographic transition happens and the second stage, demographic miracle happens, the size of the impact of labor force growth is fully dependent on the situation of the economy. Of course, the economy in expansion stage would benefit the most from this 'demographic gift'.

The last but not least effect of the population change is through the elderly part of population. The age, when people decide to retire is also various and therefore the effect of decreasing labor force can have different effects on economic growth. Another thing, which accompanies demographic transition, is the dependency of population on labor force, as majority of current pension systems are dependent on actual output. The consumption of old people can have therefore devastating effects on investments in economy. The share of old in population is also various through countries, because of different development of health services and in that matter diversity of life longevity.

To sum it up, in reality, a lot of impacts and feedbacks from demographic change take place, which end up in the variety of the results of empirical studies on population impact.

5.3 The possible population policy

The diversity of the consequences of population impact cannot be fully covered by economic theory. The exact advices for the population policy cannot be therefore pronounced, but the model above can provide a stable ground for policy

recommendations. As population change can be traced pretty correctly, government of countries should always be aware of their current situation in the savings space. It provides a good estimation for future possible development, which is valid for long run and therefore population policies, such as education investment, family support, migration policies and etc. can be undertaken and reasoned by this theory. Especially for least developed countries, the current situation of their population should be watched for a stable development from poverty.

We hope that the study of the population by government together with this theory would provide an instrument for macroeconomic policy, which would help to smooth the economic growth in long run.

References

Appleman, P. (1976). *Thomas Robert Malthus, An Essay on The Principle of Population.* New York: W. W. Norton & Company.

Batini, N., Callen, T., & McKibbin, W. (2006). *The Global Impact of Demographic Change.* IMF Working Paper WP/06/9.

Birdsall, N. (1988). *Economic Approaches to Population Growth and Development.* Amsterdam: In Hollis B. Chenery and T. N. Srinivasan, eds., Handbook of Development Economics.

Birdsall, N., Kelley, A. C., & Sinding, S. W. (2001). *Population Matters: Demographic Change, Economic Growth, and Poverty in the Developing World.* New York: Oxford University Press Inc.

Bloom, D. E., & Canning, D. (April 2005). *Global Demographic Change: Dimensions and Economic Significance.* Harvard Initiative for Global Health, Working Paper Series, Working Paper No.1.

Cahlík, T. (2006). *Makroekonomie.* Praha: Univerzita Karlova v Praze, Nakladatelství Karolinum.

Easterlin, R. A. (1968). *Population, Labor Force, and Long Swings in Economic Growth, The American Experience.* New York: National Bureau of Economic Research.

Keyfitz, N. (1991). *Why Population is Said to be Unimportant for Environment and Development: Or How to Make the Population Problem Disappear.* Washington: Paper presented at the Population Association of America.

Kuznets, S. (1967). *Population and Economic Growth.* Proceedings of the American Philosophical Society. 111 (3), 170-93.

McNicoll, G. (1984). *Consequences of Rapid Population Growth: An Overview and Assessment.* Population and Development Review. 10 (2), 177-240.

Nations, U. (1953). *The Determinants and Consequences of Population Trends.* New York: Department of Social Affairs, Population Division, Population Studies No.17.

Srinivasan, T. (1988). *Population Growth and Economic Development.* Journal of Policy Modeling. 10 (1) (Spring), 7-28.

World Population Prospects: The 2008 Revision Population Database. (2009). Cit. 2009. Website: http://esa.un.org/unpp/index.asp