**Charles University**

Faculty of Social Sciences
Institute of Economic Studies

MASTER'S THESIS

# Austrian Business Cycle Theory and Its Application to Economy of Euro Area

Author: **Bc. Martin Forejt**

Supervisor: **PhDr. Michal Hlaváček, Ph.D.**

Academic Year: **2018/2019**

## Declaration of Authorship

The author hereby declares that he compiled this thesis independently, using only the listed resources and literature, and the thesis has not been used to obtain a different or the same degree.

The author grants to Charles University permission to reproduce and to distribute copies of this thesis document in whole or in part.

Prague, May 10, 2019

Signature

## Acknowledgments

I would like to express my gratitude to PhDr. Michal Hlaváček, Ph.D. for supervising my work on this thesis, for his time and for his valuable advice throughout the year. I would also like to thank to my family for their support and love.

## Bibliographical Record

Forejt, M. (2019): *Austrian Business Cycle Theory and Its Application to Economy of Euro Area*, Prague, 63 pp., Master's Thesis (Mgr.), Charles University in Prague, Faculty of Social Sciences, Institute of Economic Studies, Supervisor: PhDr. Michal Hlaváček, Ph.D.

## Bibliografický záznam

Forejt, M. (2019): *Rakouská teorie hospodářských cyklů a její aplikace na ekonomiku eurozóny*, Praha, 63 s., Diplomová práce (Mgr.), Univerzita Karlova v Praze, Fakulta sociálních věd, Institut ekonomických studií, Vedoucí práce: PhDr. Michal Hlaváček, Ph.D.

# Abstract

This thesis is aimed at econometric testing of the Austrian business cycle theory on data from euro area. The thesis consists of two models. First model tests the hypothesis that decreasing the market interest rate below the natural interest rate increases consumable output in the short run and decrease in the long run. The second model examines the effects of changes in interest rates of different maturities on the structure of production and employment in different national sectors of production. We reject the first hypothesis in this thesis, but confirm other two hypotheses.



| | |
|---|---|
| **JEL Classification** | E30, E14, E43, |
| **Keywords** | business cycle theory, Austrian school of economics, Austrian business cycle theory, econometric analysis |



| | |
|---|---|
| **Author's e-mail** | `mart.forejt@gmail.com` |
| **Supervisor's e-mail** | `michal.hlavacek@unrr.cz` |
| **Range of thesis** | `118,237 characters` |



# Abstrakt

Tato práce se zaměřuje na ekonometrické testování rakouské teorie hospodářských cyklů na datech z eurozóny. Práce se skládá ze dvou modelů. První model testuje hypotézu, že snížení tržní úrokové sazby pod přirozenou úrokovou sazbu zvyšuje krátkodobě produkci spotřebních statků a dlouhodobě ji snižuje. Druhý model zkoumá vliv změn úrokových sazeb různých termínů splatnosti na strukturu produkce a zaměstnanosti v různých národních výrobních odvětvích. V této práci první hypotézu odmítáme, ale potvrzujeme další dvě hypotézy.



| | |
|---|---|
| **Klasifikace JEL** | E30, E14, E43, |
| **Klíčová slova** | teorie hospodářských cyklů, rakouská škola, rakouská teorie hospodářských cyklů, ekonometrická analýza |



| | |
|---|---|
| **E-mail autora** | `mart.forejt@gmail.com` |
| **E-mail vedoucího práce** | `michal.hlavacek@unrr.cz` |

# Contents

# List of Tables

# List of Figures

# Acronyms

**ABCT** Austrian business cycle theory

**ADF** augmented Dickey–Fuller test

**C** consumption

**ERE** evenly rotating economy

**I** investment

**PPF** production posibility frontier

**VECM** vector error correction model

# Master's Thesis Proposal

| | |
|---|---|
| **Author** | Bc. Martin Forejt |
| **Supervisor** | PhDr. Michal Hlaváček, Ph.D. |
| **Proposed topic** | Austrian Business Cycle Theory and Its Application to Economy of Euro Area |

**Motivation** The causes of business cycles and the impact of cycles on national income and employment are one of the most important areas of study for modern macroeconomics. One of the theories dealing with their origins is the Austrian business cycle theory developed by Austrian School economists Ludwig von Mises (1953) and Friedrich A. von Hayek (1975). This theory describes an impact of credit expansion not covered by real savings on relative prices of products at different stages of production, leading to malinvestment and subsequent phases of boom and bust.

Austrian business cycle theory offers rather qualitative predictions regarding the relationship between real interest rates and capital structure. However, although this theory was not originally intended for econometric testing, in the past decades several studies have been made to verify it empirically using econometric methods. One of the first studies was Wainhouse (1984), using the impulse response function of ARMA model on monthly data from United States between 1959 to 1981. More recent studies have been applicated using the ECM model on quarterly data from United States between 1950 to 1991 (Keeler, 2001) and on monthly time series from United States between 1959 to 2003 (Mulligan, 2006) and between 1959 to 2000 (Mulligan, 2002) and Bismans and Mougeot (2009), using the fixed effects model on quarterly data on period 1980 to 2006 from Germany, USA, England and France.

With the exception of Bismans and Mougeot (2009), none of the available studies deals with the data from countries of the current euro area. This is particularly surprising given the fact that economies of these countries are much more dependent in company financing on the bank credit than the economies of Anglo-Saxon model. This is something that better fits the Austrian business cycle theory with its impact on bank credit as a cause of business cycle.

## Hypotheses

Hypothesis #1: Decreasing the market interest rate below the natural interest rate increases real consumable output in the short run and decreases real consumable output in the long run.

Hypothesis #2: Employment is procyclical with output in sectors more distant from final consumption.

Hypothesis #3: Employment is countercyclical with output in sectors closer to final consumption.

**Methodology** To examine the hypotheses, I will follow procedures from Mulligan (2006) and Mulligan (2002).

For testing the first hypothesis, I will use quarterly data on final consumption expenditure of households from Germany, France, Italy and Spain from first quarter of 1995 to present (1995Q1 is the first quarter for which data are available for all countries) provided by Eurostat. The above mentioned four countries were selected because they were part of euro area from the beginning and because they represent south and north of euro area with its differing economic models and economic performance.

Harmonised Index of Consumer Prices will be used to obtain real final consumption expenditure of households as a measure of real consumable output. As a measure of short term interest rate, I will use data on 3-month EURIBOR rates for the same period provided by Eurostat and as a proxy for long term risk free interest rate I will use data on German 10 years government bond interest rates provided also by Eurostat. These data will be used to construct the term spread. In contrast to Mulligan (2006), I will have to tackle with different monetary conditions on the European financial markets after the Great recession. In the environment of zero interest rates and quantitative easing, data on interest rates may not contain all the information. To solve this problem, I will also include quarterly data on volume of loans to households and non-financial corporations provided by ECB database and by national databases (for period before 2003).

To examine the relationship between real consumable output, volume of loans and term spread (i.e. to examine Hypothesis #1), I will use the vector error correction model. This model describes the comovement of two or more cointegrated time series by examination of long-term equilibrium relationship and short-term dynamics of adjustments to deviations from equilibrium. To find the order of integration of time series, augmented Dickey–Fuller test will be applied. Because the real final consumption expenditure is expected to be I(1) and term spread expected to be I(0), the cumulative sum of term spread will be used (Mulligan, 2006). To find if the

cointegration exists between time variables, I will run Johansen test. If the expected cointegration will prove to be true, I will proceed to test the vector error correction model. The long-term effect of increase in the cumulative term spread and in the volume of loans on the real final consumable output is expected to be negative. Expected short-term effect of increase in these variables is to be positive.

To test next two hypotheses, I will use quarterly data on sectoral employment for same countries and same period provided by Eurostat. Employment data include sectors like manufacturing, construction, wholesale and retail trade, finance, real estate, government and services. As a measure of short term interest rates, I will use 3-month, 6-month and 12-month EURIBOR rates provided by Eurostat. Short term interest rates are used because they are more relevant for determining labor allocation (Mulligan, 2002). To incorporate effects of quantitative easing and environment of zero interest rates, I will also include into my model quarterly data on volume of loans to households and non-financial corporations and also quarterly data on shadow interest rates in euro area. To construct shadow interest rate, I will follow shadow rate term structure model (SRTSM) first proposed by Wu and Xia (2016) and adjusted for the environment of time-varying lower bound (Wu and Xia, 2017). To obtain shadow interest rate, I will use data on yield curves of AAA-rated euro area central government bonds provided by ECB database.

After collecting necessary data, I will continue to vector correction model. After performing same set of tests as in previous hypothesis, I will proceed to find the optimal lag length, for which I will use the likelihood ration test. After estimating the vector error correction model, the model itself will provide tool for dividing sectors into early stage and late stage of production, where the former should have negative relationship between interest rates and sectoral unemployment and for the latter the opposite should be true. A priori, typically manufacturing or construction should be early stage, while wholesale and retail trade should be late stage.

**Expected Contribution** The purpose of this thesis is to contribute to still not very extensive area of econometric examination of Austrian business cycle theory. The most important contribution of this thesis, compared to other similar studies on this topic, should be that I will examine the theory on data from euro area. The obtained results can be also used in the central bank policy analysis and as a forecasting tool.

## Outline

1. Introduction

2. The Austrian Theory of the Business Cycles: In this chapter, I will describe

theoretical foundations of the Austrian theory of capital and Austrian business cycle theory.

3. Quantitative Implications and Previous Empirical Literature: I will provide the main testable hypotheses on Austrian business cycle theory here and then briefly describe previous empirical literature on this topic.

4. Data: I will explain the source of data that I will use in my thesis with their justification and then I will describe them statistically.

5. Methodology: I will explain the error correction models used in my thesis as well as other statistical tests used in my research.

6. Results: I will provide the econometric results on my models and do the robustness checks.

7. Conclusion: I will shortly summarize content of my thesis and then propose opportunities for further research.

## Core bibliography

BISMANS, F. & C. MOUGEOT (2009): "Austrian Business Cycle Theory: Empirical Evidence." The Review of Austrian Economics 22(3): pp. 241–257

DE SOTO, J.H. (2006): Money, Bank Credit, and Economic Cycles. Auburn: Ludwig von Mises Institute

GARRISON, R.W. (2001): Time and Money: The Macroeconomics of Capital Structure. London: Routledge

HAYEK, F.A. (1975): Monetary Theory and Trade Cycle. Clifton: Augustus M. Kelly Publishers

KEELER, J.K. (2001): "Empirical Evidence on the Austrian Business Cycle Theory." The Review of Austrian Economics 14(4): pp. 331-351

MISES, L. von (1953): The Theory of Money and Credit. New Haven: Yale University Press

MULLIGAN, R. (2002): "A Hayekian analysis of the term structure of production." The Quarterly Journal of Austrian Economics 5(2): pp. 17–33

MULLIGAN, R.F. (2006): "An Empirical Examination of Austrian Business Cycle Theory." The Quarterly Journal of Austrian Economics 9(2): pp. 69-93

WAINHOUSE, C.E. (1984): Empirical Evidence for Hayek's Theory of Economic Fluctuations, chapter 2 in "Money in Crisis: The Federal Reserve, the Economy, and Monetary Reform" (ed. B. N. Siegel), pp. 37-71. San Francisco: Pacific Institute for Public Policy Research.

WU, J. C. & F.D. XIA (2016), "Measuring the macroeconomic impact of monetary policy at the zero lower bound." Journal of Money, Credit and Banking 48(2-3): pp. 253-291

WU, J. C. & F.D. XIA (2017), "Time-Varying Lower Bound of Interest Rates in Europe." Chicago Booth Research Paper 17(6): pp. 1-39

Author

Supervisor

# Chapter 1

# Introduction

The causes of business cycles and the impact of cycles on national income and employment are one of the most important areas of study for modern macroeconomics. One of the theories dealing with the origins of business cycles is the Austrian business cycle theory, developed by Austrian School economists Ludwig von Mises and Friedrich A. von Hayek in first decades of 20th century. This theory describes an impact of credit expansion not covered by real savings on relative prices of products at different stages of production, leading to malinvestment and subsequent phases of boom and bust.

Austrian business cycle theory offers rather qualitative predictions regarding the relationship between real interest rates and capital structure. However, although this theory was not originally intended for econometric testing, in the past decades several studies have been made to verify it empirically using the econometric methods.

This thesis expands the body of these econometrical examinations of Austrian business cycle theory. Our analysis focuses on countries from euro area and consists of two models. First model tests the hypothesis that decreasing the market interest rate below the natural interest rate increases consumable output in the short run and decrease in the long run. The second model examines the effects of changes in interest rates of different maturities on the structure of production and employment in different national sectors.

The thesis is structured as follows. Chapter 2 presents the Austrian business cycle theory as developed by Ludwig von Mises and Friedrich A. von Hayek. In the second half of the chapter, we also include the model of Roger W. Garrison. Chapter 3 is providing the review of existing literature on econometrical analysis of Austrian business cycle theory. In Chapter 4, we provide description and

motivation of data, that we use in our analysis ,and also the methodology of our two vector error correction models. Chapter 5 discusses the results of our econometric analysis. Chapter 6 concludes.

# Chapter 2

# Austrian Theory of the Business Cycle

In this chapter, we describe the Austrian theory of the business cycle. We start with brief description of the Austrian methodology, then proceed to the Austrian theory of capital and Austrian monetary theory and in the second half of this chapter, we cover the Austrian business cycle theory itself and demonstrate it in model of Roger W. Garrison.

## 2.1 Methodology of the Austrian school of economics

The main pillars of the Austrian methodology were outlined during the so-called Methodenstreit in the 1880s. Although the opponents in this dispute were supporters of the German Historical School, some arguments made during the debate served also later for differentiating the Austrian school as a unique school of thought against neoclassical paradigm. These pillars, on which Austrian methodology stands, are: apriorism, methodological individualism and methodological subjectivism.

The Austrian school strongly builds on a priori knowledge. In the center of Austrian economics is the axiom of human action, which says that *human action is purposeful behavior* (von Mises 1998, pg. 11). All economic theorems are deduced from this one irrefutable axiom, sometimes with addition of a few uncontroversial empirical assumptions.[1] Beside several of these assumptions,

[1]For example Rothbard (2009, pg. *lvi*) uses two assumptions: that there is a variety of human and natural resources; and that leisure is a consumers' good. These two statements

Austrian economics does not use any empirical data. For majority of Austrian economists, society is too complex phenomena and they are therefore skeptical about the use of empirical data for confirmation or refutation of theories about society.

The principle of methodological subjectivism says that all economic categories like value, information, knowledge or any other facts of social sciences have subjective nature. According to Ludwig von Mises (1998, pg. 92):

> Economics is not about things and tangible material objects; it is about men, their meanings and actions. Goods, commodities, and wealth and all the other notions of conduct are not elements of nature; they are elements of human meaning and conduct. He who wants to deal with them must not look at the external world; he must search for them in the meaning of acting men.

Another pillar of Austrian methodology is the principle of methodological individualism. According to this principle, economic science starts with the study of behavior of individual people and only after this stage continues with the study of more complex, social phenomena. This does not mean, as it is sometimes argued, that principle of methodological individualism refuses the existence of social entities per se. Instead, it rather says that these social entities are not something that would be able to manifest themselves on its own, but that they are always manifested only through the minds and actions of individuals (von Mises 1998, pg. 42):

> It is illusory to believe that it is possible to visualize collective wholes. They are never visible; their cognition is always the outcome of the understanding of the meaning which acting men attribute to their acts. We can see a crowd, i.e., a multitude of people. Whether this crowd is a mere gathering or a mass (in the sense in which this term is used in contemporary psychology) or an organized body or any other kind of social entity is a question which can only be answered by understanding the meaning which they themselves attach to their presence. And this meaning is always the meaning of individuals.

are not deductible from axiom of human action, but they are broadly observable and therefore could be considered uncontroversial.

## 2.2 Basic Terms

As has been already said, the Austrian economics starts with the axiom of human action, which says that human action is a purposeful behavior. According to this axiom a man acts to achieve certain goals. We define the *utility* as a subjective valuation of means, about which a man believes that they can help him to achieve desired goals. However, at the same time these means and goals are never given, but they are constantly discovered by acting man. Thus, in the course of human action, a man is constantly creating judgment about new goals and new means, so that the framework in which one chooses between different goals, and different means to achieve these goals, is not in any way limited in advance. This attribute of human action, when acting man makes judgments about possible goals and possible means for obtaining these goals, is called *entrepreneurial discovery* (von Mises 1998, Chapter I.) .

The means to meet human needs are called *goods*. These could be divided into two categories: a) goods that are directly usable to meet the human needs; and b) goods that could be converted into directly usable goods. We will call the first category *consumer goods*, or *goods of the first order*, while the second category is called *producer goods*, or *goods of higher order*. The process of direct satisfaction of human needs is called *consumption*, the process of indirect use of means to achieve consumer goods is called *production* (Rothbard 2009, pg. 8).

Every human action necessarily takes place over time. Human action is always focused on the future, because only the future can be changed by action. A man's time is always scarce. This comes from the fact that human is not immortal and therefore his time for meeting his needs is necessarily limited. And because human action takes place over time and because this time is limited, a time acts for a man as a scarce means of *production* (Rothbard 2009, pg. 4-5).

Acting man creates a *plan* about his future action, in which he includes his judgment about future goals (about future goods) and about the means, through which he achieves these future goals. All the goods are divided into different orders depending on how distant they are from the final satisfaction of human needs. Acting man is usually trying to obtain these goods through a certain intermediates, which we will call *goods of the second, third to nth order*. The higher the order of each good, the more it is distant from final consumption (de Soto 2006, pg. 267-269).

Because action is always oriented on future, a man has to face *uncertainty*,

as the future is always uncertain. This comes from the fact, that if everything was certain in the future, there would be no place for action. Uncertainty stems from the ignorance of future natural phenomena, and from the existence of free human will. Uncertainty must be separated from risk. Under *risk* we will understand phenomena that we can assign numerical probability.

The difference between the person who is facing a risk and the person facing uncertainty is the same as the difference between a roulette player and a horse racing bettor. In the Austrian economics, uncertainty is the source of entrepreneurial profits and losses, while risk is only a type of cost. The difference between the Austrian concept of entrepreneur (more about it later) and the neoclassical concept of homo economicus lies in the fact that while homo economicus lives in the world of quantifiable risk, the Austrian entrepreneur has to face the fundamental uncertainty, that is given by only a very incomplete knowledge of surrounding world.

In order to uncover the consequences of uncertainty on market actors, the Austrian school has created an imaginary construct called evenly rotating economy (ERE). To be able to understand what the imaginary construct of ERE is, let us first introduce a world in which there is no change in basic economic data. This means, that there are no changes in the utility functions of people, no changes in the demographic composition of the population, nor changes in technological processes, and that there is no depletion of natural resources. Economic life in such a world would not stop, but instead would enter the state of constant flow, which could be characterized by constant production of still the same basket of consumer goods and its consumption. As a result, there will be stable prices of all economic goods. This type of imaginary world, in which there are no changes in the sense of change of economic data, is called the evenly rotating economy.

The basic feature of ERE, which is immediately apparent, is that there is no uncertainty. Therefore, there is also no space for entrepreneurial activity. By the term *entrepreneur* we will understand an entity whose function is to deal with uncertainty in the market. It is again an imaginary concept of economics, as in the real world, every acting person will necessarily be an entrepreneur, as well as it could act at the same time as a capitalist, landowner, consumer, and so on. These economic categories are called the catalactical functions (more about catalactical functions in: von Mises 1998, pg. 252-258). This approach will enable us in the theory of price to separate the individual components of market prices, that relate to the different aspects of human action. In the case

of entrepreneur, this will be a component of entrepreneurial profits and losses, which result from uncertainty.

The function of the entrepreneur on the market is in fact identical to human action. The entrepreneur's function is to hire factors of land, labor and capital, and combine them in production in such a way that serves best to the consumer wishes. The occurrence of discrepancies between the wishes of consumers, and the current state of affairs, creates profitable opportunities that lead entrepreneurs to ever better meet the needs of consumers. Entrepreneurial activity thus has the effect of constantly moving the market into the state of ERE, in which all profits are exhausted. However, the real economy never reaches this state, as changes are constantly occurring, and these changes have the effect of shifting the fictitious end state of ERE to new positions.

## 2.3 Theory of capital

As has been already said, every human action necessarily takes place over time. Time plays a significant role in theory of capital: first, because every human action takes place in time; and more importantly, because this time of action is perceived subjectively. According to the *principle of time preference*, acting man always has a tendency, for other things being equal, to prefer a certain amount of goods, which are closer to the present, over the same amount of goods, which are more distant from the present. This comes from the fact that, as we have already said in previous subchapter, time is for a man a scarce means and therefore has to be utilized economically (Rothbard 2009, pg. 15).

One of the main implications of the principle of time preference in the Austrian theory of capital is a claim, that there exists a certain tendency to prefer more roundabout production processes because of their higher productivity. This finding is based on simple knowledge, that production takes time. Furthermore, if we deal with the production of any good, there is usually a quantum of different ways how to produce it. And these ways of production may differ in two basic aspects: a) in their physical productivity; and b) in the length of production time.

If a man has to choose between two ways of production, one of which is more productive and the other productive less, then, for other things being equal, he will clearly choose the more productive one. Similarly, according to the principle of time preference, if man has to choose between one method of

production, that lasts longer, and another production method, that takes less time, then he will clearly choose the shorten one.

But there is also another possibility, that acting man would have to make a choice between such production processes, which differ in both aspects, namely between production processes that have higher productivity, but last longer, and those that have less productivity, but have a shorter wait time. Which one from these two ways of production a man will choose is not possible to determine in advance, because it will depend on the degree of time preference of the individual. Higher the time preferences will be, the more he or she will prefer current consumption and therefore shorter and less productive production processes will be chosen. And the opposite will be true for low time preferences. In addition, there may also be a case where the product cannot be produced in a shorter period of time. In that case, such a product will not be produced until the time preference falls below a certain level. This problem thus represents a basic economic dilemma, that people have to deal with when acting in real time.

Intermediate stages of production are called *capital goods*. Capital goods develop from the combination of three production factors: labor, land (and natural resources) and "time". In order to create capital goods, they must be preceded by the process of saving. *Saving* here means the process of abandoning current consumption, in order to achieve higher consumption in the future. The stock of capital goods can thus be considered as accumulated time. The subject, whose function is to perform the savings process, is called a *capitalist* (de Soto 2006, pg. 277).

Modern production structures are extremely complex, long and mutually intertwined. This complexity of the modern economy has as a result a high heterogeneity of capital goods. To say that the capital goods are heterogeneous actually means, that they must differ, if they should not be all the same. The reason why we highlight this fact is, that there is a tendency in mainstream economy to regard capital as a kind of homogeneous fund, that can flow freely from one sector of the economy to another (de Soto 2006, pg. 516). Factor, that prevents such a thing in the real world, is the different suitability of different capital goods for the production of various final goods. By *specificity* of capital goods we would mean the degree of transferability of these assets to other sectors (Rothbard 2009, pg. 38).

We have also mentioned term capital. *Capital* means in Austrian economics a market value of a certain stock of capital goods. Capital is therefore an

abstract tool of economic calculation that allows entrepreneurs to make easier decisions. As such, it can only exist in a market economy and cannot exist in a socialist economy (de Soto 2006, pg. 282).

## 2.4 Monetary theory and fractional reserve banking

As we will see later, in the Austrian theory of business cycles is the issue of periodically recurring economic crises closely connected with monetary theory and with the existence of fractional reserve banking. It is therefore necessary here to describe the Austrian view on these two topics.

From the economic point of view, the difference between loan and deposit lies in the fact, that the loan represents the exchange of current economic goods for future goods, whereas in the case of a demand deposit this type of exchange does not happen. Deposit thus remains a current good, as by its depositing the depositor does not give up the current services that the good provides. For these reasons, the demand deposits should not be considered as a loan, which is, however, in the sharp contrast to the way how the modern banking sector approach them. Fractional reserve banking thus creates a situation, where the same amount of money is available to both the depositor, as well as the recipient of the demand deposit, i.e. the bank. This allows us to understand why new money is created in the economy, because the same amount of money provides now service to two or more players at the same time (de Soto 2006, pg. 14-15).

It is important to note here, that this confusion between loan and deposits is not limited just on demand deposits, but also for term deposits (loans), in case that there is a possibility in the contract, that the depositor may choose to collect its deposit before the expiration of pre agreed-term. Depositor then treats the deposit as a cash deposit, although imperfect as such a premature withdrawal of the deposit is usually subject to a fee. But the overall effect on the money supply in the economy is similar.

Since the bank has a large number of such demand deposits and because their volume usually do not change significantly over time, it allows banks to lend some of these deposits to other economic actors. This results in the process of multiplying the amount of money in the economy, which is already well known, and therefore we do not have to deal with it extensively here.

As we will see later, the Austrian business cycle theory is dealing with the consequences that such money made from nothing will have on the real economy. A key role in this will be played by a so-called *Cantillon effect*. According to this concept any increase in the amount of money in the economy does not cause the respective price rise all at once, but instead it always acts gradually, step by step, and in the direction of money flowing into the economy, and never influence different prices in the same way.

For example, if we would consider the situation, in which the government decides to use money to finance war production, it will always be the armament sector (or those sectors that provide services directly to the military), which will first feel the price increase, as that increase in the amount of money will first appear as a demand for the final assets of this sector.

This increased demand will result in an increase in the prices of these goods and thus in increased profits in this sector. This will encourage entrepreneurs from these industries to begin expansion of war production, and thus resulting in increased demand for the economic resources needed to produce the goods. In order for these resources to be shifted from other parts of the economy, a higher price should be offered again.

In this way, the price "revolution" will be spreading gradually throughout the economy, until it will result in the new price pattern (under the assumption of single isolated change in the volume of money). This increase in the amount of money will thus have two effects. First, it will result in the transfer of resources from sectors further away from point of entry of new volume of money into economy, into the sectors that are closer to where money enters the economy. So this will change the structure of the economy, after the transition period, which will keep the flow of new money into the economy. And secondly, this will cause ownership shifts by allowing people involved in manufacturing relatively closer to the point of money entry into the economy to sell their services and goods at new prices while still enjoying the benefits of buying for old, lower prices (von Hayek 1967, pg. 8-9).

In other words, we say that money is not neutral, not in a short term, as it causes changes in the structure of production, and not even in the long term, as it causes redistribution of wealth within society. In fact, as Ludwig von Mises (1998, pg. 415) notes, every concept of neutrality of money is inherently contradictory, as it claims that money does not have its driving force. But money without its driving force could not even be money.

The Cantillon effect manifests itself in every increase of money in the econ-

omy. It does not matter whether there is an increase in the amount of gold in the system of gold standard, or whether the increase in money is caused by the central banks that are printing the fiat money, or if the growth of currency aggregates is caused by the banking sector. What matters is the way, or the direction, where the money enters the economy.

In the case of credit expansion driven by banks, the primary price effect will be a reduction in the interest rates. This decline will happen due to the fact that the only way how can banks introduce new loans to the market, is by reduction of the interest rates that they charge to their clients. This reduction does not necessarily reflect absolute values. It may, for example, be reflected in a relaxation of the other terms of the credit agreement. However, since these conditions would otherwise lead to the higher interest rate required for the loan, it means practically the same. The same is true when credit expansion results in a stable interest rate, if interest rates would otherwise rise without credit expansion. Or if credit expansion will result in lending to those entities that otherwise would not have received the loan without changing the rate of interest. All these examples should be taken as equal to the fall in the interest rate (von Mises 1998, pg. 549-550).

## 2.5 Roger Garrison's model: building elements

In this section, we will demonstrate the Austrian theory of business cycles on model of Roger W. Garrison, which he himself calls the model of capital-based macroeconomics. Motivation for his work was to offer a framework which would bring Austrian economics closer to the mainstream paradigm and which would offer us macroeconomic model where:

- consumption and investment always move together in the short run
- consumption and investment must move in opposite direction to change the economy's rate of growth
- long run emerges as a seamless sequence of short runs

The model of Roger W. Garrison has been developed in his book *Time and Money: The Macroeconomics of Capital Structure* (Garrison 2001). This model is based on three mutually interconnected graphs: the graph of production possibility frontier, the graph of the market of loanable funds and the Hayekian

triangle. Before proceeding to description of whole model, we will start by showing basic elements on which the model is build.

The first graph can be seen in Figure 2.1 and depicts the market for loanable funds. This model is well known from neoclassical economics. A supply side of the market represents here willingness of capitalists to lend at different interest rates. Demand side represents eagerness of entrepreneurs to borrow for investment. We can immediately see that it is the interest rate that puts demand and supply in balance.

Figure 2.1: Market for loanable funds

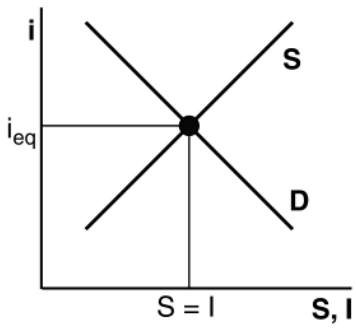


*Source:* Garrison (2001).

Few comments are necessary here. First, supply side do not include consumer lending. This means that all saving in supply side is intended for business community. Second, purpose of all saving is to maintain and expand existing capital structure. Third, supply side includes also retained earnings and savings in the form of purchase of equity shares. And fourth, demand side in this graph represents demand for saving for the purpose of investing into real physical assets like plant, property and equipment and also goods in process (Garrison 2001, pg. 36-37).

Generally, demand for loanable funds could be described as willingness of entrepreneurs at various stages of production to pay for inputs now, in expectation to sell outputs at some expected higher price in the future. Therefore, the function of the market for loanable funds is to put the production plans of entrepreneurs in coordination with time preferences of consumers (Garrison 2001, pg. 37-38).

As has been already said, it is the interest rate what equilibrates demand and supply for loanable funds. The competition between entrepreneurs makes them utilize every profit opportunity from discrepancies between differing interest rates, thus causing the market to move to the imaginary state of ERE with uniform interest rate, which we will call *pure interest rate*. However, it should be also noted that this state will never be truly achieved, as in the real market new changes in primary economic data will constantly occur.

Second basic element of Garrison's model is the production posibility frontier (PPF). Also PPF is well known from neoclassical economics, although as Garrison (2001, pg. 40) remarks, it is rarely integrated into the macroeconomic models. In this type of graph, usually two alternative outputs are negatively related to each other. In Figure 2.2, we can see classical depiction of the above mentioned diagram with guns and butter as goods. We can see that with the increasing number of units of produced butter, it is less and less easy to substitute it for guns (and conversely). This comes from the fact that some resources in economy are better suited for production of one type of good, while other resources are better suited for production of other type of good. With the increasing production of butter, we have to use more economic resources that are less suitable for production of butter and more suitable for production of guns.

Figure 2.2: Production possibility frontier

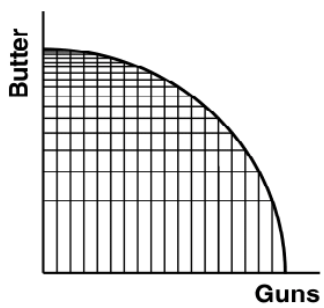


*Source:* Garrison (2001).

For our purpose will be important slightly different version of the above-mentioned graph with consumer and capital goods as outputs. This relationship will also enable us to dynamically extend the whole concept. In Figure 2.3 we

can see this relationship depicted on the example of Japan and United States in the postwar period.

Figure 2.3: Production possibility frontiers with different growth paths I

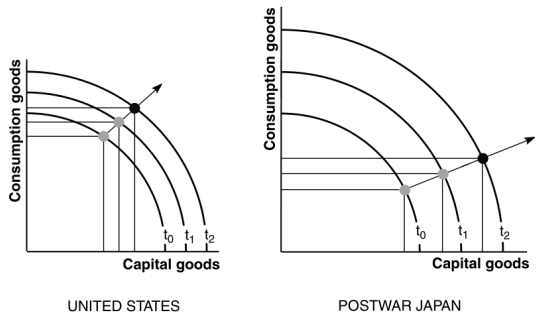


*Source:* Garrison (2001).

We can see that the lower time preferences in Japan had an effect of putting Japan on the path of faster growth, compared to United States with higher time preferences. Thus, this graphical representation will enable us to depict the trade-off between consumption (C) and investment (I) and to connect the PPF through I with the market of loanable funds.

It is important to emphasize again that investment here is measured in gross terms. This means that I consists of investment necessary for maintenance of the invested level of capital as well as investment dedicated to the extension of current level of capital. This implies that there must be some point on the frontier, where economy does not grow nor shrink, that is, where the level of net investment is zero. This situation with stationary, no-growth economy is depicted in Figure 2.4, along with other two possible combinations of consumption and investment leading to expansion and contraction of economy (Garrison 2001, pg. 41-42).

We can now proceed to the description of the intertemporal structure of production. For this purpose, Friedrich August von Hayek has developed the so-called Hayekian triangle, which makes third part of the Garrison's model, and which depicts the relationship between value dimension and the time dimension of the structure of production. In the Figure 2.5 we can see an economy divided into five stages of production, each according to its distance from final consumption. Five stages of production are arbitrary assumption here, the triangle could as well have for example four or six stages. For the sake of clarity and simplicity, all these stages are represented by whole sectors (like mining,

Figure 2.4: Production possibility frontiers with different growth paths II

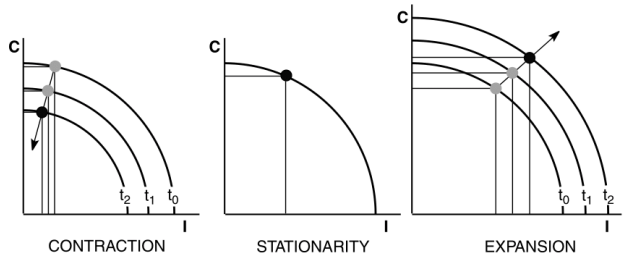


*Source:* Garrison (2001).

manufacturing or retail trade). The production time dimension is represented here on the horizontal axis, while the value dimension is represented on the vertical axis (Garrison 2001, pg. 46).

Figure 2.5: Hayekian triangle

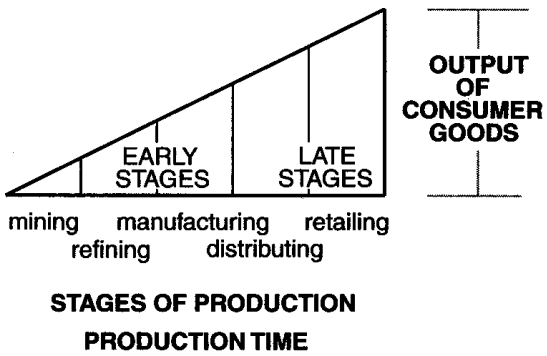


*Source:* Garrison (2001).

We can see that value of goods in the early stage of production is lower than value of goods in the later stages of production and value of these goods is again lower than the value of final consumable output. There are two reasons for this: first, that other inputs are yet to be added before production will be finished; and second, that value of the inputs already involved in the production is time-discounted due to their distance from the final consumption. This means, that slope of the hypotenuse represents here the value added by original production factors and by time (Garrison 2001, pg. 46).

According to J.H. de Soto (2006, pg. 294), there are two ways in which this graph can be interpreted. Either we can understand different stages as consecutive (diachronic view), or as parallel (synchronous view). This means

that either we can look on the stages of production as on stages through which every single produced good must go through, or we can look on them as on stages that must coexist together in every single moment in time to ensure the continuity of production.

Some complications could occur, if we would like to include also durable capital goods. To solve this problem, we need to understand that individual services provided in individual years have to be distributed among different stages of production, each according to their distance from final consumption. This is in line with statement that the market value of durable capital good is equal to the discounted market value of services provided by it. The same is true for durable consumption goods (de Soto 2006, pg. 299-301).

## 2.6 Basic model of stationary economy

After describing each part of the model separately, we can now proceed to the connection of all elements into a single model. In Figure 2.6 we can see all elements of the model related to one another. We can see that the PPF and the market of loanable funds are connected through the level of investment. In the same way are the PPF and Hayekian triangle linked through the levels of consumption. What is less explicit is the connection between the PPF and Hayekian triangle.

Figure 2.6: Roger Garrison model

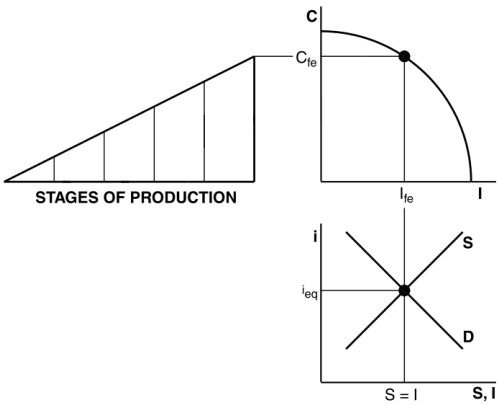


*Source:* Garrison (2001).

To solve this problem means, that we have to first understand, that the slope of the triangle's hypotenuse is only partially reflecting the interest rate determined in the marker for loanable funds. The reason for this is, that the

shape of the triangle (as we have already said above) is not fully determined by the time preferences, but also by other inputs, that are continually added during the process of production. However, what we can say with certainty, is, that (for other things being equal) the change in the interest rate as well as change in the slope of hypotenuse will always have same direction. That is, with the decrease in interest rate the slope will get shallower and vice versa (Garrison 2001, pg. 50).

Displayed in its simplest form, Figure 2.6 represents a fully employed, no-growth economy (similar to stationary economy from Figure 2.4. The rate of interest on the market of loanable funds is at the level, where it correctly reflects the time preferences of market participants. Gross investment here is on the level just enough high to offset the depreciation of capital. This means that investment is distributed across the structure of production so that the various stages of production are sustainable on current levels. And income earners consume the output on level, where they are still able to save enough to finance the gross investment. These conditions, which are determining what we have called the state of ERE, will be important in our later discussion of business cycles (Garrison 2001, pg. 51).

In addition to listing all the elements that make up the model, it is equally important to list also the elements, that the model does not contain explicitly. In first instance it will be market for money. The reason, why money has no market of its own, is that in Austrian economics, the market of money is contained in all the markets (with trivial exceptions), because money appears on one side of every exchange. And correspondingly, money is present on every axis of every diagram in our model. According to von Hayek (1967, pg. 127): "It means also that the task of monetary theory [...] is nothing less than to cover a second time the whole field which is treated by pure theory under the assumption of barter, and to investigate what changes in the conclusions of pure theory are made necessary by the introduction of indirect exchange."

To put it in another words, we certainly do not want to underestimate the role of money in economy. As we would see later, Austrian theory of business cycles is actually a monetary theory of business cycles. Money makes in Austrian economics what Hayek has called a "loose joint" of economy. And according to him, the role of monetary theory is to identify possible instances in which the system is out of the "joint", due to the intermediating role of money causing misallocation persisting long enough to have macroeconomic effects (Garrison 2001, pg. 51-52). And the boom and busts in the economy

are one of these instances, as we will see later.

Another market missing in our analysis is labor market. It is because labor is already present as input in Hayekian triangle, so the market for labor is not modeled explicitly. However, in situations when it would be desirable, we will expand our model to include also labor market.

## 2.7 Secular and technological growth

From the case of the stationary economy we can now distinguish the case of what Roger Garrison calls the state of secular growth. This type of growth occurs without having been caused by changes in economic policy, nor by technological advance or by a change in intertemporal preferences, but only through capital accumulation caused by the levels of gross investment. This situation is depicted in Figure 2.7. We can again see that the economy is in condition similar to the expanding economy from Figure 2.4.

Figure 2.7: Secular growth

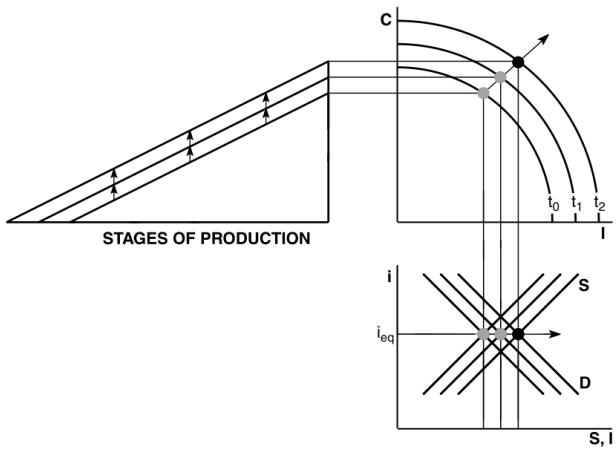


*Source:* Garrison (2001).

In the graph of PPF, we can see expansion of frontier from $t_0$ through $t_1$ to $t_2$. This movement is accompanied by synchronized movement in both the supply and demand for loanable funds at the graph depicting their market, all without the change in interest rate. This is equivalent to our claim that there are no changes in intertemporal preferences. The amount of savings continually increases due to increase in disposable income and this supply is demanded by business community to maintain a growing capital structure.

Because the rate of interest does not change, also the slope of hypothenuse of the Hayekian triangle remains same. Therefore, the savings are spread equally among all stages of production. Secondary effect, which is not directly observable from the graph, is that with given amount of money and growing output the price level is decreasing (Garrison 2001, pg. 54-55).

Similar effect will be obtained from growth induced by technological advance. This situation is depicted in Figure 2.8. Here, it is important to understand, that even if technological advance is originally situated in one or several markets, resulting increase in productivity will be spread by the resource allocation into the whole economy and thus will shift the whole PPF outward. Although not necessarily, the second possible effect could be also change in the shape of the curve, depending on the nature of that technological change (Garrison 2001, pg. 57).

Figure 2.8: Technology-induced growth

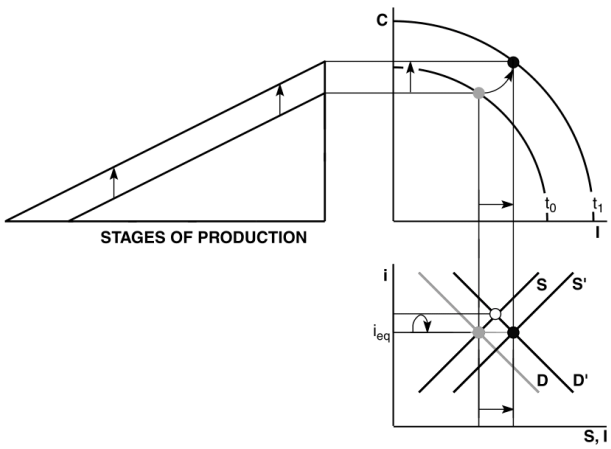


*Source:* Garrison (2001).

In our example, we assume that the initial technological change occurs at an early stage. As the entrepreneurs will take the opportunity from technological change, the demand for loanable funds will shift to the right and correspondingly to this also interest rate will increase in short term. This movement is depicted in Figure 2.8 as a shift of the demand curve from D to D´. Because the change occurs first at early stage, final consumable output does not increase immediately and therefore the curve of the supply of loanable funds does not move in the beginning.

Because of the temporarily increased interest rate, the entrepreneurs are incentivized to reallocate resources into the later stages of production and this

will subsequently increase the overall output of economy. Because of the resulting higher incomes, also the supply of loanable funds will move to the right (this is again depicted as a shift of the supply curve from S to S´). However, the resulting effect on the interest rate cannot be determined here, as it will depend on the size of the shifts of demand and supply of loanable funds. In Figure 2.8, this influence on interest rate is assumed to be neutral. But certainly there is a possibility, that interest rates will rise for a substantial period between two equilibriums (Garrison 2001, pg. 57-58).

As in the previous case, the rate of interest does not change and therefore also the slope of hypothenuse of the Hayekian triangle remains same. As mentioned in our discussion of the effect of technology-induced growth on PPF, even in the case that technological innovation takes place in only one stage of production, subsequent resource reallocation will spread the effect evenly among all stages (Garrison 2001, pg. 58).

It should be also noted that our description of technology-induced growth would be equivalent to the description of consequences of an increase in available natural resource. This comes from a simple fact, that the discovery of new mineral deposits is in its effects equivalent to a discovery of new and better ways of extracting minerals from old deposits (Garrison 2001, pg. 60-61).

## 2.8 Changes in intertemporal preferences

To display effects of change in intertemporal preferences in our model, we will assume for simplicity a single permanent decrease in consumer time preferences. To highlight importance of changes in time preferences on economy, it is not necessary to assume that they should occur frequently and be dramatic. Quite to the contrary, Garrison (2001, pg. 61) emphasizes that even small changes could have significant effect, especially when we consider the cumulation of that effect over time.

When we look in Figure 2.9, we can see a decrease in time preferences – or, to put it differently, an increase in consumers propensity to save – depicted in the graph of market for loanable funds (in) as rightward shift of supply curve from S to S´. In the PPF, we can see equivalent decrease in consumption in favor of increased investment. Both of these movements are mutually consistent in our depiction (Garrison 2001, pg. 61-62).

First consequence of decreased demand for final consumption goods in graph of PPF will be a decrease of demand for outputs from stages that are closer to

Figure 2.9: Saving-induced growth with capital restructuring

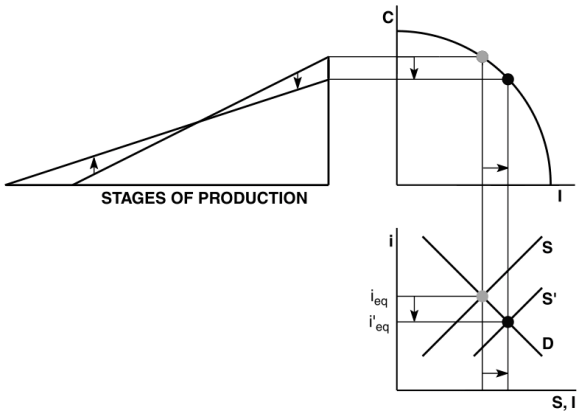


*Source:* Garrison (2001).

final consumption and thus reducing the height of the Hayekian triangle in Figure 2.9 (both graphs are linked to each other through the level of consumption). This decline is necessary if we want to ensure, that resources will be released, in order to be later utilized for investment. (Garrison 2001, pg. 62-63)

Another visible consequence of increase in saving will be a decrease of market interest rate and an increase in borrowed funds. Also this movement will have an impact on structure of production, as the decreased interest rate will result in preference of new and longer production processes. This statement is based on the fact that value of outputs of individual stages of production is discounted by interest rate, and therefore with decrease in interest rate, the value of these outputs will increase. And even more importantly, this effect on value will be more significant, the more these stages will be distant from final consumption (because value of outputs from these stages was previously more discounted due to their time distance from final consumption ) (Garrison 2001, pg. 63-64).

Another effect of this stimulation of investment will be the creation of completely new stages of production, even more distant from final consumption. This claim is in consistence with our previous statement that decreased interest rate will result in preference of longer production processes.

When we look at Hayekian triangle in Figure 2.9, we can see how these two opposing forces will result in complete change of the shape of Hayekian triangle. This change is consistent with our previous claim that with decreased rate of interest also the slope of hypotenuse will decrease. In stages of production closer to final consumption will dominate the effect of decreased consumption,

while the effect of increased investment will dominate in stages that are more distant from final consumption. And in stages that lie on the intersection of old and new Hayekian triangle, we can see that these effects will mutually balance out.

For our research will be of particular interest to break down the process of capital restructuralization and its link to labor market. In Figure 2.10, we can see that the increased saving has different effects on the labor markets in different stages of production. The reason for this is that labor demand here is a derived demand. Therefore, a reduction in the demand for consumer goods results also in reduction of demand for labor in stages closer to final consumption, while increase of investment increases demand for labor in more distant stages. In new stages of production also new labor markets are created. Like other factors of production, value of labor is discounted by time, so with a decrease in discount value of labor increases. And more distant in time it will be, the more it will increase (Garrison 2001, pg. 64-65).

Figure 2.10: Garisson's model with labor market

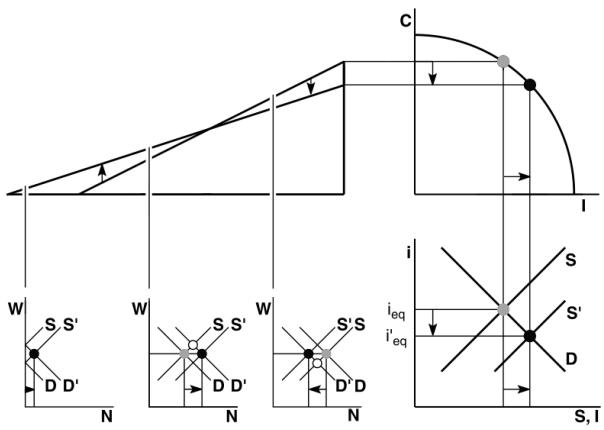


*Source:* Garrison (2001).

This process will also affect wages. At the beginning of the process, the wages will increase or decrease in the same direction as demand for labor. Later, when the process of restructuralization will stabilize on new dynamic equilibrium, the wages will return to their initial nominal levels. These graphs could be used also for description of movement of non-specific capital (Garrison 2001, pg. 64-65).

## 2.9 Business cycles in Garrison's model

Austrian business cycle theory is a monetary theory of business cycles. According to Roger Garrison (2001, pg. 68): "Dating from the early work of Ragnar Frisch, it has been the practice to categorize business cycle theory in terms of the impulse (which triggers the cycle) and the propagation mechanism (which allows the cycle to play itself out). Describing the Austrian theory of the business cycle as monetary in nature on both counts is largely accurate."

But attention here is not focused on the effect of increased quantity of money on general price level, but instead on changes in relative prices in economy. According to Austrian business cycle theory (ABCT), money never affects the entire economy at once, but it rather gradually passes the economy from the point of entry to the whole.

In Figure 2.11, we can see the model of economy reacting on the entry of new money into economy. Our assumption here is that new money enters the economy through credit markets, which is in line with the concept of banks as creators of money in the economy (and especially central banks as creators of money). This artificial credit expansion causes in Figure 2.11 the shifting of supply curve of loanable funds to the right by value $\Delta M_C$ (Garrison 2001, pg. 69).

Figure 2.11: Model of business cycle

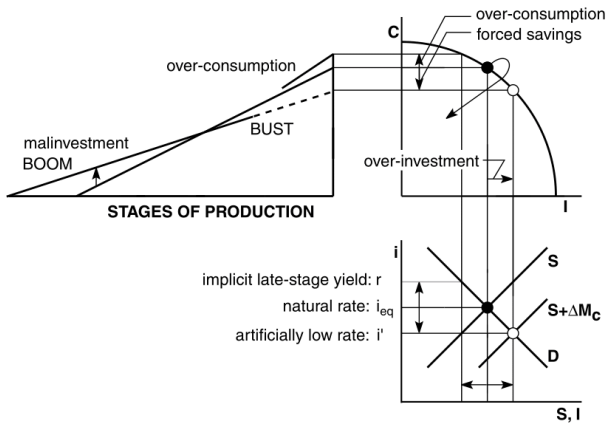


*Source:* Garrison (2001).

As in our example of savings-driven growth from previous subchapter, movement of supply curve will lead to the decrease in interest rate and increase of loanable funds. However, in contrast to the previous example, this expansion of loanable funds is not anymore driven by voluntary increase in savings. This

fact is in graph of market for loanable funds depicted as difference between equilibrium interest rate $i_{eq}$ (or the so-called natural rate, which means interest rate that would prevail on the market in case that no artificial credit expansion would occur) and new artificially low interest rate $i^{|}$. It is important to note here this difference, because it will play a key role in our later analysis (Garrison 2001, pg. 69).

Moreover, because time preferences did not change (by assumption), the actual amount of savings will due to decreased interest rate also decrease. As a result, a gap between saving and investment will appear on the market for loanable funds (Garrison 2001, pg. 70).

Similar movements could be observed on the graph of PPF. Due to the decreased consumption, an increase of consumption will occur, thus pushing the economy upwards in the direction of y-axis. However, at the same time, increased investment will tend to push economy to the right side, in the direction of x-axis. Together, these forces will cause the economy to move into the north-east, thus effectively pushing beyond the frontier of PPF. This situation is made possible by the fact that PPF is defined as *sustainable* combination of consumption and investment (Garrison 2001, pg. 70).

Under what conditions is this departure made possible? This situation stems from the fact that the decisions made by income earners and by entrepreneurs are at least partly separate. Under conditions with which we worked in previous examples, it was the price system that coordinated the actions of income earners and entrepreneurs, to be in mutual harmony. Distortion of prices made by the increased amount of money is exactly what makes this departure possible in short term (Garrison 2001, pg. 70). Here, the money makes what was above called a "loose joint".

Because the introduction of new money started in the credit market, it is the investor community which have stronger initial position in decision-making about where the resources should be directed. With lower interest rate long-term investment projects becomes more attractive for entrepreneurs and they therefore start process of boom in early stages of production (in Figure 2.11 the situation is marked as malinvestment). However, because lower interest rates tends to discourage saving, also consumers spend more on consumption, therefore starting boom also in late stages of production (in Figure 2.11 marked as over-consumption). Both of these trends give different and mutually conflicting slopes to the Hayekian triangle, as highlighted in Figure 2.11 (Garrison 2001, pg. 71-72).

Both of these processes on opposite ends of triangle are running at the expense of middle stages of production. This is a clear evidence that whole process is unsustainable. Over time, entrepreneurs start to realize that resources are more and more scarcer due to the increased competition between different stages of production. Together with competition for credit, which is called distress borrowing, and is caused by necessity of more credit in order to finish the once started projects, this altogether puts upward pressure on the real interest rate. Entrepreneurs are getting aware that their expectations based on deformed pattern of prices were wrong. Thus, the process is effectively getting to turn back (Garrison 2001, pg. 72-73).

As some of the projects are getting unsustainable, entrepreneurs start to abandon them. This causes unemployment of labor and other resources and economy is turning back to the PPF. The effect of this unemployment is decreased income of owners of these factors and therefore decreased demand for consumption goods. And because the previous period of unsustainable growth has been pushed primarily by investment, economy is on its path to sustainable combinations of investment and consumption crossing the frontier of PPF on the point, which combines higher investment, in comparison to previous consumption, thus effectively following the clockwise direction. This situation of decreased consumption in favor of investment is in ABCT called *forced saving* (Garrison 2001, pg. 73).

However, the economy will do not stabilize on this point, as it only represents the sustainable level of output, but not a sustainable mix. Instead of stabilization, the economy will continue in its implosion below the frontier of PPF. The force that prevents here economy to turn strictly to the north-west direction along the frontier of PPF is limited liquidity of the investments in early stages of production. And thus it effectively prevents the economy to increase consumable output (instead of this, the demand of entrepreneurs for capital to finish their once started investments tends to further decrease consumption) (Garrison 2001, pg. 74).

Economy in our model disposes endogenous forces that push the economy in long term to the PPF frontier, but these forces always act with delay long enough to do not prevent economy from move away of the PPF frontier (Garrison 2001, pg. 74). What had happened is, that the credit expansion has started a process of capital restructuring, which however was not backed by changes in time preferences.

# Chapter 3

# Review of Econometric Literature

Although Austrian business cycle theory offers rather qualitative predictions regarding the relationship between real interest rates and capital structure, and although this theory was not originally intended for econometric testing, there have been made several econometrical studies in the past decades to verify ABCT.

One of the first such studies was Wainhouse (1984). In his article, Wainhouse identifies nine empirical hypothesis regarding the ABCT: 1) that changes in the supply of credit are independent of changes in the supply of savings; 2) that changes in the supply of credit lead changes in rates of interest and they are inversely related; 3) that changes in the rate, by which credit itself change, lead changes in the output of producer goods (i.e. output of producer goods reacts on acceleration in the supply of credit, and not directly on the change in the supply of credit itself); 4) the ratio of producer goods prices to consumer goods prices tends to rise after the initiation of a credit expansion; 5) and the prices of producer goods closest to final consumption tend to decline relative to the prices of producer goods further away from the final consumption; 6)in the later phase of the cycle, the ratio of producer goods prices to consumer goods prices tends to decrease; 7) in the later phases of the cycle, unemployment will increase first in producer goods industries and then, with some lag, also in consumer goods industries; 8) in the neighborhood of the cycle peak, employment will expand in consumer goods industries as relatively more labor resources are applied both in response to the fall in real wages and in an effort to satisfy consumer demand; 9) also around the cycle peak, inflation in raw materials prices will exceed that in consumer goods prices (Wainhouse 1984).

Wainhouse (1984) use the impulse response function of ARMA model on

monthly data from United States between 1959 to 1981 to find the Granger causality to prove the first three hypotheses. Next three hypotheses are tested only graphically and the last three hypotheses remains for future examination.

More recent studies have been applicated using the ECM model on quarterly data from United States between 1950 to 1991 in (Keeler 2001). Author tests and confirms the hypothesis, according to which the liquidity effects lowers market interest rates below the natural interest rate, also that the investment flows and capacity utilization are systematically increased for more capitalistic production processes during the period of expansion. He also finds that short-term interest rates adjust to long-term interest rates with a mechanism, that is related to the cycle and that the expansion phase entails the contraction phase when the resource allocations are reversed.

Bismans & Mougeot (2009) test the long-run relationships between the changes in variables representing the fluctuations of economic activity through the cycle, like the ratio of real GDP to natural real GDP, to the other variables like term spread, the ratio of consumption expenditure to investment expenditure, and the ratio of consumption price index and production price index. Author uses quarterly data from period between 1980 to 2006 for Germany, USA, England and France and employs a fixed effects model. His findings are very close to these made by (Keeler 2001). The negative effects of term spreads and ratios of consumption expenditure to investment expenditure on ratios of GDP are identified.

Mulligan (2002) examines the relationship between interest rates on government securities and resource employment in different production sectors. Author test the hypothesis that lowering the interest rates leads to boom in sector of producer goods (in sectors that are more distant from final consumption) and decline in sector of consumer goods (in sectors that are closer to final consumption). And in the same way that the increase in the interest rates leads to boom in sector of consumer goods and decline in sector of producer goods.

These two hypotheses are also in accordance with the predictions made by ABCT, as described in Chapter 2. Mulligan (2002) test this hypothesis on monthly U.S. data starting from 1959 to 2000. To examine the transfers of resources between sectors, he analyses the sectoral labor employment data. The labor market data include sectors like manufacturing, construction, finance, insurance, real estate, mining etc. The interest rate maturities range from 3 months to 5 years.

To examine relationships between these variables, author uses the vector er-

ror correction model. Author finds strong positive cointegration relationships between interest rates and sectors closer to the final consumption and negative cointegration relationships between interest rates and sectors more distant from the final consumption. Apart from this, all coefficients have same signs consistently across all interest rate maturities. Mulligan (2002) findings thus represent strong support for the ABCT.

In Mulligan (2006), author continues his analysis and tests the hypothesis that lowering the market interest rate below sustainable market levels increases real consumable output and investment in the short run, but lowers both over the long run. This is in accordance with the predictions made by ABCT, as described in Chapter 2. Mulligan (2006) test this hypothesis on monthly U.S. data starting from January 1959 to March 2003.

As a measure of real consumable output, Mulligan (2006) uses personal consumption expenditures, and as a measure of changes in itterest rates, author uses cumulative term spread, where the term spread is defined as ten years interest rate minus 3-month interest rate on U.S. bonds. The term spread here is interpreted as a measure of real interest rate and cumulative spread therefore as a measure of real return over time. The vector error correction model is then used to analyze the cointegration between these two variables.

In his analysis, Mulligan (2006) finds a strong positive cointegration between cumulative term spread and real consumable output. According to author's interpretation, one-percent decrease in the cumulative term spread leads to 1.2 trillion decrease of real consumable output for every month in which term spread falls, which is an economically significant effect.

## 3.1 Concluding remarks

We have decided to re-estimate the two models estimated in Mulligan (2002) and Mulligan (2006) on European data. The reason for this is, that they provide more robust models and according to our judgment the hypotheses examined in these studies fits the best on claims made by the Austrian business cycle theory.

However, we have decided to make one correction regarding the interpretation of term spread in Mulligan (2006). Author identifies term spread as a measure of real interest rate, which is according to our judgment a mistake. According to author the expansionary monetary leads to the decrease in term spread. But according to our judgment, the opposite is true. If we will accept

the assumption that monetary policies have direct effect on short-term interest rates, but not on long-term interest rates, then we have to conclude that monetary expansion must have an effect of increase of term spread.

Paradoxically, the view employed in Mulligan (2006) has become correct in last decade due to the quantitative easing. These policies had an effect of pushing also the long-term rates close to zero, thus actually pushing also the term spreads to zero. This is however not a cause for Mulligan2006, who examines periods long before the quantitative easing. We will therefore employ in our models interpretation that expansionary monetary policies have an effect of causing the term spreads to rise. However, to control for the contradictory effects of quantitative easing, we decided to employ in our model also the volumes of loans to households and non-financial corporations.

This is not the only inconsistency, that we have found in Mulligan (2006). During estimation of our first model, we have come to the conclusion that author probably overlooked the fact that his model in fact estimates the elasticities, and not the absolute levels.

# Chapter 4

# Methodology and Data Description

This chapter describes the data and methodology used in our econometric analysis. The first section describes in detail data used for econometric estimation and motivates their choice. The next two sections describe the vector error-correction methodologies used in our two models. Our econometric analysis builds on models developed by Mulligan (2002) and Mulligan (2006). We will follow the Johansen-Juselius procedure (Johansen & Juselius 1990) of cointegration analysis to research the short-term and long-term effects of several macroeconomic variables on each other.

## 4.1 Data description

Our dataset consists of two data collections for our two models. Before we proceed to the description of individual datasets and individual data, we will shortly describe general attributes of the data.

In this study, we focus our analysis on euro area countries. There are two main justifications for this: at first, that with the exception of Bismans & Mougeot (2009), no other available econometric analysis of ABCT focuses on the euro area; and for second, that analysis of euro area is of particular interest to us, for the fact that economies of these countries are much more dependent in company financing on the bank credit, compared to economies of Anglo-Saxon model. This is something that better fits the Austrian business cycle theory with its impact on bank credit system as the cause of business cycles.

We have focused in our study on four euro area countries: Germany, France, Italy and Spain. These countries were selected because they were part of euro area from the beginning and because they represent south and north of euro

area with their differing economic models and economic performance. For example, Germany is a country with stable price levels in their post-war period, and on the opposite side, Italy is a country with several episodes of high inflation and unstable price levels in the period before introduction of euro.

Germany could be described in terms of comparative economics as representing the coordinated type of market economy (CME), with the coordination among market participants depending heavily on non-market coordination mechanisms, such as business associations, labor unions and tripartite contracts between employers, employees, and governments. Country also rely heavily on industry and qualified labor force. On the other hand, countries like France, Italy and Spain could be classified into a mediterranean type of market economy, which could be described by combination of large agrarian sector, a history of non-market coordination in the sphere of corporate finance, but on the other hand more liberal arrangements of labor relations (Geffen & Kenyon 2005). All countries also differ in terms of government debt, GDP per capita, depth of the economic and debt crisis etc. This heterogeneity among countries increases the robustness of our analysis.

Our data were collected in period between the first quarter of 1996 and third quarter of 2018. There are also several reasons, why we have chosen this period: at first, 1996Q1 is the first quarter for which time series were available for all countries on Eurostat and other sources of data; for second, this period overlaps with the time of existence of the euro area, if we will include into this also the previous convergence period; and for third, 1996Q1 is the first quarter for which the process of convergence of methodologies, according to which individual data are measured across member countries, became sufficiently precisely developed, so that we can be sure that the methodologies of data collection across countries are consistent and do not differ (EMI 1996).

All data are in seasonally and calendar unadjusted form. There are two reasons for this. First, we were not able to obtain them consistently adjusted across countries. For example in case of data on sectoral employment, the data for France were available only in seasonally adjusted form, while for other countries only in seasonally and calendar adjusted form, but not in purely seasonally adjusted form. The other reason follows from the fact, that Austrian economists are generally sceptical about data adjusting. They argue that this method can lead to loss of information important for understanding the business cycle (for example, see Shostak 2017).

Now, we can proceed to the description of individual data. First, we will

comment on data used in our first model. In this model, we test our first hypothesis, that decreasing the market interest rate below the natural interest rate leads to increase of real consumable output in the short run, but later to the decrease of real consumable output in the long run. To test this hypothesis, we use unadjusted quarterly data from Eurostat on final consumption expenditures of households from Germany, France, Italy and Spain from first quarter of 1996 to the third quarter of 2018.

To convert the expenditures of households into real terms, we use the monthly data on Harmonized Index of Consumer Prices. This dataset was again collected for Germany, France, Italy and Spain from January 1996 to September 2018. These data were then converted into quarterly form by method of moving averages, where data for each quarter represents average of all three months in the quarter.

As a measure of short-term interest rate, we use quarterly data on 3-month EURIBOR rates for the same period provided by Eurostat. And as a proxy for long-term risk-free interest rate, we use quarterly data on German 10-years government bond interest rates provided by Federal Reserve Economic Data. These data are then used for construction of the term spread. The term spread is here defined as 10 years government bond interest minus 3-month EURIBOR rate.

Because the term spread is expected to be stationary process and thus cannot be cointegrated with other variables, we follow the approach from Mulligan (2006) and use the cumulative sum of term spread. With such a change, also the meaning of variable change. The cumulative sum of term spread now thus measures the cumulative effect of monetary policy on term spreads. The original term spreads could be now understood as first differences of this new variable.

In the environment of zero interest rates and quantitative easing, data on interest rates may not contain all the information. To solve this problem, we include also data on total credit to non-financial corporations, and also data on total credit to households and non-profit institutions serving households, both unadjusted for breaks and both provided by Federal Reserve Economic Data.

The detailed description of all variables is provided in Table 4.1. The summary statistics are provided in Table 4.2.

Now, we can proceed to description of data for our second model. Our second model tests the next two hypotheses, that lowering the interest rates leads to boom in sector of producer goods (in sectors that are more distant

Table 4.1: Description of variables for model I

| | |
|---|---|
| CONSUMPTION | Final consumption expenditure of households<br>quarterly data, current prices, million euro, unadjusted<br>Germany, France, Italy, Spain<br>1996Q1-2018Q3, source: Eurostat |
| HARM_INDEX | Harmonized indices of consumer prices<br>monthly data, all items, index, 1996 = 100<br>Germany, France, Italy, Spain<br>1996M1-2018M9, source: Eurostat |
| EURIBOR3M | 3-month EURIBOR rates<br>quarterly data, 3-month rates, percent<br>Euro area<br>1996Q1-2018Q3, source: Eurostat |
| GOV_BOND | German 10-year government bond interest rates<br>quarterly data, 10-year rates, percent<br>Euro area<br>1996Q1-2018Q3, source: Federal Reserve Economic Data |
| HOUSEHOLDS | Total credit to households and non-profit institutions serving households<br>quarterly data, EUR billions, unadjusted for breaks<br>Germany, France, Italy, Spain<br>1996Q1-2018Q3, source: Federal Reserve Economic Data |
| NF-CORPORATIONS | Total credit to euro area non-financial corporations<br>quarterly data, EUR billions, unadjusted for breaks<br>Germany, France, Italy, Spain<br>1996Q1-2018Q3, source: Federal Reserve Economic Data |

Table 4.2: Model I dataset: summary statistics

| N=91 | CONSUMPTION | | HARM_INDEX | |
|---|---|---|---|---|
| Country | Mean | SD | Mean | SD |
| Germany | 327,678.44 | 46,358.54 | 117.36 | 11.82 |
| France | 239,974.50 | 46,188.69 | 118.90 | 12.48 |
| Italy | 219,824.80 | 37,732.50 | 126.69 | 16.43 |
| Spain | 133,029.18 | 32,921.52 | 132.68 | 19.99 |

| N=91 | EURIBOR3M | | GOV_BOND | |
|---|---|---|---|---|
| Country | Mean | SD | Mean | SD |
| Euro area | 1.324912 | 1.585533 | 3.250481 | 1.798667 |

| N=91 | HOUSEHOLDS | | NF-CORPORATIONS | |
|---|---|---|---|---|
| Country | Mean | SD | Mean | SD |
| Euro area | 202,248 | 22,915.98 | 570,244 | 75,178.56 |

from final consumption) and decline in sector of consumer goods (in sectors that are closer to final consumption). And in the same way that the increase in the interest rates leads to boom in sector of consumer goods and decline in the sector of producer goods. Also these two hypotheses are in accordance with the predictions made by ABCT, as described in Chapter 2

To test these hypotheses, we use quarterly data on sectoral employment for Germany, France, Italy and Spain from first quarter of 1996 to the third quarter of 2018. Employment data include sectors manufacturing, industry, construction, wholesale and retail trade, finance, real estate, government and services. All data on employment were provided by Eurostat.

As a measure of short-term interest rates, we use quarterly data on money market interest rates of 3-month, 6-month and 12-month EURIBOR rates provided by Eurostat. Short-term interest rates are used because they are more relevant for determining labor allocation, which is the same approach as in (Mulligan 2002). We also include in our model monthly data on yields of 3-year and 5-year German federal government bonds, provided by database of German Bundesbank. As in the case of Harmonized index of consumer prices, we used the method of simple moving averages to transform data from monthly

into quarterly form. This means, that data for every quarter represents the average value of variable for all three months of the quarter.

This variety of interest rates is important to us, as different interest rates influence different productive activities. (Mulligan 2002) lists the decision-making horizons, to which these interest rates relate, each sorted from shortest to longest duration:

- duration of production process
- installation period of productive capital
- expected useful life of installed capital

As in the first model, I will again include the quarterly data on total credit to non-financial corporations, and also data on total credit to households and non-profit institutions serving households, both unadjusted for breaks and both provided by Federal Reserve Economic Data. These will control the effect of quantitative easing.

The detailed description of variables is provided in Table 4.3. The summary statistics for sectoral employment are provided in Table 4.4. The summary statistics for other variables in second model are provided in Table 4.5.

## 4.2 Model of interest rate term spread and consumable output

In this subchapter, we present our first vector error-correction model based on Mulligan (2006), which examines the relationship between real consumable output and the interest rate term spread. The main hypothesis here is that with decrease of market interest rate below the level of natural (sustainable) interest rate, there will be increase of real consumable output in the short run and decrease of real consumable output in the long run. This hypothesis is in line with the description of the causes of business cycles as described by ABCT and as described in previous chapter. However, our interpretation of term spread here differs from Mulligan (2006), who interprets the term spread as a measure of real interest rate. In our mode, we interpret term spread as a measure of distortion of the structure of interest rates by the monetary policy and by the credit expansion made by fractional reserve banking.

Table 4.3: Description of variables for model II

| | |
|---|---|
| EMPLOYMENT | Sectoral employment<br>quarterly data, total employment domestic concept, thousand persons, unadjusted<br>Germany, France, Italy, Spain<br>1996Q1 - 2018Q3, source: Eurostat |
| SHORT_TERM_RATES | Money market interest rates<br>quarterly, spot rate, percent per annum<br>Euro area, maturity 3 months - 12 months<br>1996Q1 - 2018Q3, source: Eurostat |
| LONG_TERM_RATES | Yields on 3-year and 5-year German federal government bonds<br>monthly, yields derived from the term structure of interest rates, percent per annum<br>Euro area, maturity 3-year and 5-year<br>1996Q1 - 2018Q3, source: Deutsche Bundesbank |
| HOUSEHOLDS | Total credit to households and non-profit institutions serving households<br>quarterly data, EUR billions, unadjusted for breaks<br>Germany, France, Italy, Spain<br>1996Q1-2018Q3, source: Federal Reserve Economic Data |
| NF-CORPORATIONS | Total credit to euro area non-financial corporations<br>quarterly data, EUR billions, unadjusted for breaks<br>Germany, France, Italy, Spain<br>1996Q1-2018Q3, source: Federal Reserve Economic Data |

Table 4.4: Model II dataset: summary statistics, employment

| N=91 | Germany | | | Spain | |
|---|---|---|---|---|---|
| Variable | Mean | SD | | Mean | SD |
| Industry | 8142.65 | 293.03 | Industry | 2714.76 | 330.70 |
| Manufacturing | 7534.52 | 245.01 | Manufacturing | 2498.23 | 343.86 |
| Construction | 2581.05 | 324.80 | Construction | 1669.68 | 549.35 |
| Wholesale&retail | 9414.65 | 384.83 | Wholesale&retail | 5170.08 | 760.36 |
| Finance | 1231.19 | 42.78 | Finance | 371.42 | 20.70 |
| Real_estate | 439.09 | 41.12 | Real_estate | 158.71 | 58.53 |
| Pub_admin | 9583.48 | 703.44 | Pub_admin | 3510.68 | 510.40 |
| Service | 2816.72 | 175.68 | Service | 1521.50 | 212.82 |

| N=91 | France | | | Italy | |
|---|---|---|---|---|---|
| Variable | Mean | SD | | Mean | SD |
| Industry | 3338.65 | 344.40 | Industry | 4653.58 | 301.57 |
| Manufacturing | 3044.20 | 353.96 | Manufacturing | 4346.04 | 308.39 |
| Construction | 1669.15 | 166.19 | Construction | 1673.55 | 186.15 |
| Wholesale&retail | 5933.44 | 381.09 | Wholesale&retail | 5958.48 | 361.21 |
| Finance | 744.70 | 36.73 | Finance | 670.19 | 18.49 |
| Real_estate | 364.69 | 14.74 | Real_estate | 161.99 | 21.92 |
| Pub_admin | 7785.53 | 393.33 | Pub_admin | 4611.26 | 93.85 |
| Service | 1363.15 | 138.13 | Service | 2308.57 | 293.25 |

Table 4.5: Model II dataset: summary statistics, other variables

| N=91 | EURIBOR3M | | EURIBOR6M | |
|---|---|---|---|---|
| Country | Mean | SD | Mean | SD |
| Euro area | 1.320877 | 1.626682 | 1.452632 | 1.619758 |

| N=91 | EURIBOR12M | | 3-YEARS RATE | |
|---|---|---|---|---|
| Country | Mean | SD | Mean | SD |
| Euro area | 1.625263 | 1.612604 | 2.6713 | 1.806553 |

| | 5-YEARS RATE | | | |
|---|---|---|---|---|
| Country | Mean | SD | Mean | SD |
| Euro area | 3.36963 | 1.832513 | | |

| N=91 | HOUSEHOLDS | | NF-CORPORATIONS | |
|---|---|---|---|---|
| Country | Mean | SD | Mean | SD |
| Euro area | 202,248 | 22,915.98 | 570,244 | 75,178.56 |

Mulligan (2006) proposes the error-correction model as a methodology that is most suitable for testing of ABCT, as it estimates at first the equilibrium process toward which the economy is heading, and at the same time also error-correction process of adjusting toward the equilibrium.

The error-correction model is formed from two parts: a structural equation, which defines the long-term equilibrium process; and a short-term process of adjusting from disequilibrium. Therefore, the residuals from structural equation acts as estimates of disequilibrium. For our hypothesis, the structural equation for single country is:

$$C_t = AR_t^b L_t^d H_t^f E_t$$

where $C$ is consumption, $A$ is a scaling constant, $R$ is a cumulative term spread, $L$ represents loans to non-financial corporations, $H$ loans to households, $b$, $d$ and $f$ are weighting exponents, and $E$ is a multiplicative residual. When we put the equation into natural logarithms, we obtain:

$$c_t = a + br_t + dl_t + fh_t + e_t$$

where c and r are the natural logarithms of consumption and the cumulative term spread and l and h are natural logarithms of loans to non-financial corporations and households. The vector error correction model for single country is:

$$\Delta c_t = \Theta(c_{t-1} - a - br_{t-1} - dl_{t-1} - fh_{t-1}) + \Delta c_{t-1} + \Delta c_{t-2} + \Delta c_{t-3} + \dots$$

$$\dots + \Delta r_{t-1} + \Delta r_{t-2} + \Delta r_{t-3} \dots$$

$$\dots + \Delta l_{t-1} + \Delta l_{t-2} + \Delta l_{t-3} \dots$$

$$\dots + \Delta h_{t-1} + \Delta h_{t-2} + \Delta h_{t-3} \dots + u_t$$

$$\Delta r_t = \Psi(c_{t-1} - a - br_{t-1} - dl_{t-1} - fh_{t-1}) + \Delta c_{t-1} + \Delta c_{t-2} + \Delta c_{t-3} \dots$$

$$\dots + \Delta r_{t-1} + \Delta r_{t-2} + \Delta r_{t-3} \dots$$

$$\dots + \Delta l_{t-1} + \Delta l_{t-2} + \Delta l_{t-3} \dots$$

$$\cdots + \Delta h_{t-1} + \Delta h_{t-2} + \Delta h_{t-3} \cdots + v_t$$

$$\Delta l_t = \Lambda(c_{t-1} - a - br_{t-1} - dl_{t-1} - fh_{t-1}) + \Delta c_{t-1} + \Delta c_{t-2} + \Delta c_{t-3} \ldots$$

$$\cdots + \Delta r_{t-1} + \Delta r_{t-2} + \Delta r_{t-3} \ldots$$

$$\cdots + \Delta l_{t-1} + \Delta l_{t-2} + \Delta l_{t-3} \ldots$$

$$\cdots + \Delta h_{t-1} + \Delta h_{t-2} + \Delta h_{t-3} \cdots + w_t$$

$$\Delta h_t = \Omega(c_{t-1} - a - br_{t-1} - dl_{t-1} - fh_{t-1}) + \Delta c_{t-1} + \Delta c_{t-2} + \Delta c_{t-3} \ldots$$

$$\cdots + \Delta r_{t-1} + \Delta r_{t-2} + \Delta r_{t-3} \ldots$$

$$\cdots + \Delta l_{t-1} + \Delta l_{t-2} + \Delta l_{t-3} \ldots$$

$$\cdots + \Delta h_{t-1} + \Delta h_{t-2} + \Delta h_{t-3} \cdots + z_t$$

The expressions in parentheses represent here the lagged residuals from the structural equations, so they could be represented also by $e_{t-1}$. The upper-case Greek letters represent here the structural adjustment terms and they indicate the importance of the past changes in the explanatory variables, in effecting adjustments toward the hypothesized equilibrium. Whenever the economy gets out of the state of equilibrium (which is practically all the time, as the state of equilibrium represents only hypothetical state towards which the economy is permanently heading), the nonzero residual pushes the economy toward equilibrium.

For the sake of simplicity of representation, we do not display in the equations the coefficients on the lags of differenced variables, although they are also part of the model. However, they are not even interesting to us in our final analysis of the results of our models.

For the construction of model, all variables have to fulfill two conditions. The first condition is, that all variables have to be integrated of order 1 (I(1)). To test this hypothesis, we use the augmented Dickey–Fuller test (ADF). The ADF tests the null hypothesis that a time series have a unit root against alternative hypothesis that time series is stationary or trend-stationary (depending on type of the test) (for details of the test, see Wooldridge 2016, Chapter 18).

The second condition is, that the variables have to be mutually cointegrated. To test this hypothesis, we use the Johansen test, which estimates the number of vectors cointegrating the time series. This procedures test sequentially the null hypotheses, that the number of cointegration vectors r is equal to 1, 2, 3 to n, against the alternative hypothesis that the number of cointegration vectors is higher. The first non-rejection of null hypothesis is taken as estimate of the number of cointegrating vectors (for details of the test, see Johansen 1991). The existence of cointegration among variables ensures that the residuals are white noise processes.

## 4.3 Model of interest rate and employment: a Hayekian analysis of the structure of production across the economic cycle

In this subchapter, we present our second error-correction model, which is based on Mulligan (2002) and which examines relationship between interest rates and resource employment in several different sectors of production. The hypothesis here is that with the increase in interest rates, the structure of production would tend to become less roundabout, and thus there will be redistribution of productive resources from the production of goods of higher order (producer goods) towards the production of goods of lower order (primarily consumer goods). In the opposite case, the decrease in interest rate will tend to redistribute productive resources from sector of goods of lower order toward the production of producer goods of higher order.

In our model, we use labor as representant of these productive resources, and therefore the analysis of the structure of production focuses on the employment of labor across different sectors of production. Although the concept of stages of production is subjective, we use specific industries, even though they often operate simultaneously in several different stages.

It should be noted that ABCT does not rely on the distinction between real and nominal interest rates, nor on the distinction between anticipated and unanticipated changes in the general price level. What matters in ABCT is a distinction between preference-based changes in interest rates and those changes that are policy-induced. In our model, we assume that all intertemporal resource allocations caused by changes in interest rates are due to expansionary monetary policy and artificial credit expansion (Mulligan 2002, pg. 23).

As estimation methodology, we again use the vector error-correction model, with structural equation:

$$r_{i,t} = a + b_1 * m_{1,t} + b_2 * m_{2,t} + \cdots + b_s * m_{s,t} + e_{i,t}$$

where $r_i$ is interest rate with maturity $i$ and $m_1$, $m_2$ to $m_s$ are sectoral employments for manufacturing, construction, wholesale and retail trade, finance, real estate, government and services.

The vector error-correction model for all countries and for every maturity $i$ is:

$$\Delta r_{i,t} = \alpha(r_{i,t-1} - a - b_1 * m_{1,t-1} - b_2 * m_{2,t-1} - \cdots - b_s * m_{s,t-1}) + \ldots$$

$$\cdots + \Delta r_{i,t-1} + \Delta r_{i,t-2} + \Delta r_{i,t-3} + \ldots$$

$$\cdots + \Delta m_{1,t-1} + \Delta m_{1,t-2} + \Delta m_{1,t-3} + \ldots$$

$$\ldots$$

$$\cdots + \Delta m_{s,t-1} + \Delta m_{s,t-2} + \Delta m_{1s,t-3} + \cdots + u_{i,t}$$

$$\Delta m_{1,t} = \beta(r_{i,t-1} - a - b_1 * m_{1,t-1} - b_2 * m_{2,t-1} - \cdots - b_s * m_{s,t-1}) + \ldots$$

$$\cdots + \Delta r_{i,t-1} + \Delta r_{i,t-2} + \Delta r_{i,t-3} + \ldots$$

$$\cdots + \Delta m_{1,t-1} + \Delta m_{1,t-2} + \Delta m_{1,t-3} + \ldots$$

$$\ldots$$

$$\cdots + \Delta m_{s,t-1} + \Delta m_{s,t-2} + \Delta m_{1s,t-3} + \cdots + v_{i,t}$$

$$\vdots$$

$$\Delta m_{s,t} = \theta(r_{i,t-1} - a - b_1 * m_{1,t-1} - b_2 * m_{2,t-1} - \cdots - b_s * m_{s,t-1}) + \ldots$$

$$\cdots + \Delta r_{i,t-1} + \Delta r_{i,t-2} + \Delta r_{i,t-3} + \ldots$$

$$\cdots + \Delta m_{1,t-1} + \Delta m_{1,t-2} + \Delta m_{1,t-3} + \ldots$$

$$\ldots$$

$$\cdots + \Delta m_{s,t-1} + \Delta m_{s,t-2} + \Delta m_{1s,t-3} + \cdots + z_{i,t}$$

As in the first model, the expressions in parentheses represent here the lagged residuals from the structural equation, so they could be represented also by $e_{t-1}$. The upper-case Greek letters represent here the structural adjustment terms and they indicate the importance of the past changes in the explanatory variables in effecting adjustment toward the hypothesized equilibrium. Again, for the sake of simplicity of representation, we do not display in the equations the coefficients on the lags of differenced variables, although they are also part of the model.

In our model, the suggested key to division of sectors into different stages of production is as follows: a positive relationship between an employment and an interest rate indicates that sector is in late stage of production; and vice versa, a negative relationship between these two variables indicates an early stage.

As in the first model, the necesarry condition for our VECM is, that all variables have to be of order I(1) and that they must be cointegrated. To test these conditions, we again use the ADF and Johansen tests.

# Chapter 5

# Discussion of Results

In this chapter, we present the results for out two vector error correction models.

## 5.1 First VECM, unit root tests

Before we started testing the conditions for our first model, we had to first transform the variables into logs. Because some of the variables have negative values, we had to first transform them into positive values before putting into natural logarithms. The method we used here was subtraction of the minimum (negative) value from the variable and adding small positive constant, as described by formula:

$$lnY = ln(Y - min(Y) + 0.00001)$$

so that:

$$min(Y - min(Y) + 0.00001) = 0.00001 > 0$$

Because log-log models provides estimations of elasticities, this transformation do not have effect on the interpretation of our models.

First condition for application of vector error correction model (VECM) is, that all variables have to be I(1). To test this condition, we have used the Augmented Dickey-Fuller test. The ADF statistics for all countries are reported together with critical values in Table A.1, Table A.2, Table A.3 and Table A.4 in Appendix. During the first estimation of ADF test statistics, the variables ln households and ln nf_corporations representing logarithmic volumes of loans to households and non-financial corporations have proved to be at least I(2). To

solve this problem, we had to first difference them. Therefore, the estimations of ADF test statistics for these two variables are already presented in the natural logs of their first-differenced form. For this reason, we have lost one observation for each country.

In our model, we used a specification with 8 lags. This number was chosen by following the rule of thumb recommending the number of lags to be at maximum two times the frequency of data. This approach is in accordance with Mulligan (2006), where author use number of lags equal to twice the frequency of data.

According to the expectations, the variable ln spread did prove to be stationary. This represents a problem to our analysis, as an I(0) process cannot be cointegrated with an I(1) process. In order to make all variables in our VECM I(1), we have followed the approach from Mulligan (2006) and used the cumulative spread. Also this variable is reported in Table A.1, Table A.2, Table A.3 and Table A.4 under name ln cumul_spread.

From the tables, we can see that all variables are now in their current form I(1). One of the exceptions is variable ln real_consumption in France, reported in Table A.4, which has proved to be I(1) only under 10% significance level. To ensure that all variables are I(1), we have first differenced the variable ln real_consumption in case of France and the new estimations of ADF test statistics for ln diff_real_consumption in France are reported in Table A.5. We can see that after transformation, the variable is now I(1).

Also it is important to point out that variable ln diff_nf_corporations have proved to be trend stationary at 5% level of significance in case of Germany and France. To solve this problem, we include trend into the cointegration tests and also into our vector error correction models.

## 5.2 First VECM, cointegration tests

The second condition for our VECM is, that all variables have to be cointegrated. To test this condition, we have used the eigenvalue type of Johansen test. Results are reported in Table 5.1,Table 5.2, Table 5.3 and Table 5.4.

Because variable ln diff_nf_corporations have proved to be trend stationary for Germany, we have included trend into first cointegration test. In Table 5.1, we can see that the null hypothesis of zero number of cointegrations can be clearly rejected. Other null hypothesis for higher number of cointegrations are

not rejected and we therefore accept the hypothesis of number of cointegrations being equal to one.

Table 5.1: Tests for Cointegration between Consumption, Loans to Households and Non-financial Corporations and Cumulative Term Spread: Germany

| | V1 | 10pct | 5pct | 1pct |
|---|---|---|---|---|
| r <= 3 \| | 8.30213 | 10.49000 | 12.25000 | 16.26000 |
| r <= 2 \| | 15.17965 | 16.85000 | 18.96000 | 23.65000 |
| r <= 1 \| | 22.32026 | 23.11000 | 25.54000 | 30.34000 |
| r = 0 \| | 39.89279 | 29.12000 | 31.46000 | 36.65000 |

The same results were obtained in case of Spain and Italy, although we did not have to include the trend into cointegration. In case of Italy, the null hypothesis of number of cointegrations being lower or equal to one have been rejected only at 10% level of significance, so we accept the hypothesis of number of cointegrations being equal to one.

Table 5.2: Tests for Cointegration between Consumption, Loans to Households and Non-financial Corporations and Cumulative Term Spread: Spain

| | V1 | 10pct | 5pct | 1pct |
|---|---|---|---|---|
| r <= 3 \| | 5.31372 | 7.52000 | 9.24000 | 12.97000 |
| r <= 2 \| | 16.25015 | 13.75000 | 15.67000 | 20.20000 |
| r <= 1 \| | 19.43572 | 19.77000 | 22.00000 | 26.81000 |
| r = 0 \| | 54.82471 | 25.56000 | 28.14000 | 33.24000 |

Table 5.3: Tests for Cointegration between Consumption, Loans to Households and Non-financial Corporations and Cumulative Term Spread: Italy

| | V1 | 10pct | 5pct | 1pct |
|---|---|---|---|---|
| r <= 3 \| | 2.28392 | 7.52000 | 9.24000 | 12.97000 |
| r <= 2 \| | 11.52710 | 13.75000 | 15.67000 | 20.20000 |
| r <= 1 \| | 21.14866 | 19.77000 | 22.00000 | 26.81000 |
| r = 0 \| | 45.42537 | 25.56000 | 28.14000 | 33.24000 |

In case of France, we have rejected the null hypothesis that number of cointegrations is equal to zero and also null hypothesis that number of cointegrations is lower or equal to one, in both cases under the 1% level of significance. We cannot reject the null hypothesis that the number of cointegration vectors is lower or equal to number two and we therefore accept this hypothesis.

Table 5.4: Tests for Cointegration between Consumption, Loans to Households and Non-financial Corporations and Cumulative Term Spread: France

| | V1 | 10pct | 5pct | 1pct |
|---|---|---|---|---|
| r <= 3 \| | 2.66155 | 10.49000 | 12.25000 | 16.26000 |
| r <= 2 \| | 15.87723 | 16.85000 | 18.96000 | 23.65000 |
| r <= 1 \| | 29.81479 | 23.11000 | 25.54000 | 30.34000 |
| r = 0 \| | 77.03532 | 29.12000 | 31.46000 | 36.65000 |

## 5.3 Results of the first VECM

This section summarizes the results from our first error correction model. In Table 5.5, we provide the estimation of cointegration equation for Germany. This equation provides the estimation of long term equilibrium between variable ln real_consumption, representing the natural logarithm of real consumable output, the variable ln cumul_spread, which represents natural logarithm of cumulative term spread, and variables ln diff_households and ln diff_nf_corporations representing the differenced amounts of credit to households and non-financial corporations as control variables. Because all variables are in natural logarithms, the estimates of coefficients here represent the elasticities.

In Table 5.5, we can see that there is a positive cointegration between real consumption and cumulative term spread. According to the estimate of coefficient on cumulative term spread, a 1% increase of term spread leads to 0.0572% incrase of the long-term real consumption for every quarter in which term spread increases. A special attention should be paid to the fact that we are talking about *percetange* increases and not about *percetange point* increases. The interpretation of the results is made more difficult also by the fact that 1% increase of the cumulative term spread in the early period do not represent as strong economically significant increase as in the case of 1% increase of the cumulative term spread in later period.

Another challenge represents the interpretation of estimates of coefficients on elasticities of variables diff_households and diff_nf_corporations, due to the fact that they represent the *first differences* of volumes of credits to households and corporations. However, this relationship is in accordance with one of the other ABCT hypotheses, as identified by Wainhouse (1984) and as mentioned in Chapter 3, and which says that output reacts on *accelerations in the supply of credit*, and not directly on the change in the supply of credit itself.

Table 5.5: Vector Error Correction Model, Estimation of the Cointegration Equation: Germany

| | beta |
|---|---|
| ln real_consumption | 1.00000 |
| ln cumul_spread | 0.05720739 |
| ln diff_households | 0.3326452 |
| ln diff_nf_corporations | -0.3696214 |
| constant | -11.70643 |
| trend | -0.005641701 |

This means that a 1% accelerations in the supply of credit to households would require a 0.333% increase in the level of real consumption in order to keep the system in equilibrium, according to our estimates. On the opposite side, a 1% accelerations in the supply of credit to non-financial corporation would require a 0.37% decrease in the level of real consumption in order to keep the system in equilibrium. However, the opposite signs and similar values of estimates of coefficients suggest that if both variables representing the volumes of credit accelerate together, and at the similar amount, the effects on the system could mutually exclude between each other.

The estimates of the speed of adjusting processes for Germany are provided in Table 5.6. The estimate of coefficient on error correction term for real consumption says that whenever real consumption rises above the equilibrium level, the feedback loop will cause real consumption to decline by 0.0479, or by approximately 5%, of that distance in next quarter. On the other hand, the estimation of coefficient of feedback on cumulative term spread is positive, which means that same the same rise of the real consumption above the equilibrium level could at the same time lead to 8.35% rise (of that distance from equilibrium levels) of the cumulative spread, in order to put the system back in equilibrium.

Table 5.6: Vector Error Correction Model, Estimation of the Disequilibrium Adjustment Terms: Germany

| Equation | ect |
|---|---|
| ln real_consumption | -0.0479(0.0273) . |
| ln cumul_spread | 0.0835(0.0272) ** |
| ln diff_households | -2.2125(0.9952) * |
| ln diff_nf_corporations | 3.0145(1.2053) * |

The estimates of coefficients on error correction terms for volumes of credit

to households and corporations differ in signs, which only strengthens our suspicion that their effects tend to mutually exclude each other. This hypothesis will explain, why the absolute value of estimations of coefficients is even higher than 1. This situation is normally highly unusual for vector error correction models. All the estimates are statistically significant.

Results of our estimation of cointegration equation for Spain are provided in Table 5.7. Contrary to the Germany, and contrary to the results in Mulligan (2006), we have found a negative cointegration between real consumption and cumulative term spread for Spain. According to our estimation of coefficient on cumulative term spread, a 1% increase of term spread leads to 0.0938% decrease of the long-term real consumption for every quarter in which term spread increases. This is in accordance with our expectations.

Table 5.7: Vector Error Correction Model, Estimation of the Cointegration Equation: Spain

| | beta |
|---|---|
| ln real_consumption | 1.00000 |
| ln cumul_spread | -0.0937822 |
| ln diff_households | -0.06378675 |
| ln diff_nf_corporations | 0.007641333 |
| constant | -11.09389 |

The estimates of coefficients for first differences of volumes of credit to households and non-financial corporations have each opposite signs compared to Germany, although the absolute values of these estimates are economically significantly lower.

The results of our estimation of cointegration equation for Italy (provided in Table 5.9) is again different from previous two countries. While the signs of estimates of coefficients for real consumption and cumulative spread are same as for Germany, i.e. they provide evidence for positive cointegration, the estimates of coefficients for first differences of volumes of credit to households and non-financial corporations have same signs as in the case of Spain. The fact, that the estimates of coefficients on these two variables have for all three countries opposite signs, suggests that their effects on system could at least partially mutually exclude each other.

In Table 5.8 and Table 5.10, the estimations of coefficients on error correction terms shows similarly contradictory results. In case of Spain, the estimations of coefficients of error correction terms are significantly higher for

cumulative spread, which means that the process of adjusting to the equilibrium is significantly faster. The estimate is also statistically significant contrary to the estimate of coefficient on error correction term in case of real consumption. This means, that correction works only through the effects on cumulative spread and not the opposite. This is in contradiction to Mulligan (2006) and to our expectations.

Table 5.8: Vector Error Correction Model, Estimation of the Disequilibrium Adjustment Terms: Spain

| equation | ect | |
|---|---|---|
| ln real_consumption | -0.0423(0.0948) | |
| ln cumul_spread | -0.3424(0.1044) | ** |
| ln diff_households | -0.9328(3.0251) | |
| ln diff_nf_corporations | 71.2501(18.1448) | *** |

And completely opposed to what we would expect is estimation of error correction term for first differences of volumes of loans to non-financial corporations, which is positive and its absolute value is significantly higher than 1. The estimate of this coefficient is also statistically significant.

In case of Italy, the only significant estimate is on error correction term for cumulative spread, which again suggest that the process of moving to equilibrium works primarily through cumulative spread, contrary to our expectations. These estimates would mean, that the situation of rise of term spreads and credit expansion could never lead to the long-term distortions in the production structure, as only the possibility of such a situation would lead to the return of term spreads (and volumes of credit for corporations) to their natural, sustainable market levels.

Table 5.9: Vector Error Correction Model, Estimation of the Cointegration Equation: Italy

| | beta |
|---|---|
| ln real_consumption | 1.00000 |
| ln cumul_spread | 0.1012176 |
| ln diff_households | -0.294163 |
| ln diff_nf_corporations | 0.5207418 |
| constant | -13.95437 |

In Table 5.11, we provide two estimates of the cointegration equations. This number stems from the fact, that we have found two statistically significant cointegrations in our Johansen test for France. However, because we are in first

Table 5.10: Vector Error Correction Model, Estimation of the Disequilibrium Adjustment Terms: Italy

| equation | ect | |
|---|---|---|
| ln real_consumption | 0.0048(0.0374) | |
| ln cumul_spread | -0.2593(0.0539) | *** |
| ln diff_households | 0.1989(0.6929) | |
| ln diff_nf_corporations | -0.8664(1.0001) | |

instance interested in cointegration between real consumption and cumulative spread, only the first cointegration equation is interesting to us, as the second equation put the real consumption out of the cointegration system. Here, the variable on real consumption is provided in first differences, which is due to our previous finding in ADF test, which has found the real consumption to be I(2).

Table 5.11: Vector Error Correction Model, Estimation of the Cointegration Equation: France

| | beta1 | beta2 |
|---|---|---|
| ln diff_real_consumption | 1.00000 | 0.00000000 |
| ln cumul_spread | 1.311685e-01 | 1.68503675 |
| ln diff_households | -4.857226e-17 | 1.00000000 |
| ln diff_nf_corporations | 4.13652542 | 2.4548577 |
| constant | -1.059493e+01 | -28.84188336 |
| trend | -7.694492e-04 | -0.02227196 |

In the cointegration equation, the cumulative spread and first differenced real consumption are positively cointegrated, similarly to Germany and Italy. According to the estimate of coefficient on cumulative term spread, a 1% increase of term spread will lead to increase of the long term real consumption growth by 0.1311% for every quarter in which term spread increases. Also, the estimate of cointegration between first differences of volumes of loans to non-financial corporations and first differenced real consumption is positive.

According to the estimate, a 1% increase in the growth of volumes of loans to non-financial corporations will result in 4.137% increase of the long-term growth of real consumption. These signs on estimates of coefficients are according to our expectations, as our hypothesis expects that the effects of the expansion of credit will result into the long-term decrease of real consumable output. We can also see, that the estimation of the long-term effect of changes in volumes of loans to households is effectively zero.

In Table 5.12, we provide the estimations of coefficients on error correction terms for France. Here, only the estimates on first error correction term is of interest to us, as explained in the paragraph above. Here, all estimates are according to our expectations. We can see that all estimates of coefficients on error correction terms are negative and their absolute value is lower than 1. This means, that the system is providing negative feedback on all variables, whenever they get above the equilibrium level.

Table 5.12: Vector Error Correction Model, Estimation of the Disequilibrium Adjustment Terms: France

| equation | ect1 | ect2 |
|---|---|---|
| ln diff_real_consumption | -0.2284(0.7130) | 0.1033(0.0506) * |
| ln cumul_spread | -0.0169(0.0068) * | -0.0486(0.0104) *** |
| ln diff_households | 0.8543(1.4343) | -0.0716(0.1017) |
| ln diff_nf_corporations | -0.5976(0.1380) *** | 0.0341(0.2115) |

However, only the estimates on cumulative spread and volumes of loans to non-financial corporations is statistically significant. This means, again similarly to Spain and Italy, that the equilibrating effect works primarily through the effects on cumulative spread and on volumes of loans to non-financial corporations, which is in contradiction to our expectations. This estimate would mean, that the situation of rise of term spreads and credit expansion could never lead to the long-term distortions in the production structure, as only the possibility of such a situation would to the return of term spreads and volumes of credit to their natural, sustainable market levels.

## 5.4 Concluding remarks on first VECM

When estimating our first vector error correction model, we have failed to confirm our first hypothesis. This is true despite the fact, that we have found a cointegration system between selected variables, which in itself makes a powerful and interesting finding.

Although we have found also the same cointegration relationships between real consumable output and cumulative term spread as in Mulligan (2006) for most of the countries, due to the differences in our interpretation of the term spread, this relationship leads to the rejection of our hypothesis that increase in the term spreads due to the monetary policy has negative long-term effect on consumable output. Also, what is more important, we have found, contrary to

our expectations and contrary to Mulligan (2006), that the process of adjusting the time series towards their cointegrating equilibrium works primarily through effects on term spread, and not on consumable output. This unexpected effect was confirmed for all countries, except for Germany.

In next section, we will proceed to comment our results on second error correction model, which tests the hypothesis regarding the relationships between interest rates and sectoral employment, as derived from Hayekian triangle.

## 5.5 Second VECM, unit root tests

As in the first model, our first condition for us to be able to apply our VECM is that all variables have to be I(1). To test this, we have used the Augmented Dickey-Fuller test. The ADF statistics for all countries are reported in Table A.6,Table A.7, Table A.8 and Table A.9 in Appendix.

In our model, we use specification with 4 lags. This number was chosen due to the high number of estimated coefficients compared to number of observations (which is however the same as in our first model), where with the higher number of lags we were not able to obtain estimates of the coefficients.

In the tables, we can see that most of the variables are of order I(1). One of the exceptions is for example in Germany variables construction, which represents employment in construction sector, or also finance in Italy. We have found these variable to be of order higher than I(1). This suggest to use them first differenced and they are therefore already reported in their first differenced form.

As in the previous model, variables households and nf_corporations proved to be of order higher than 1 in all countries, and we therefore had to first difference them. We can see that after transformation, they are now all of order I(1) for all countries at least on 5% level of significance or higher. Also 5-years interest rates had proved to be of order I(2) and we had to therefore difference it. Apart from this variable, all other interest rate variables have proved to be I(1).

As can be seen from the tables, also some of the other sectoral employment variables have proved to be of order I(2) in some countries and we had therefore to also difference them. All differenced variables can be identified in tables by prefix "diff". These variables are: Construction, Finance and Pub_admin in Germany; Construction, Finance, Manufacturing, Pub_admin, Real_estate, Service and Wholesale&retail in Spain; Construction, Pub_admin and Service

in Italy; and Wholesale&retail in France. As in the first model, we have lost one observation due to this transformation.

The only exception from the list in previous paragraph is the variable Finance, which in case of France have proved to be of order higher than I(2). We have therefore excluded variable Finance from our model in case of France. It should be also noted, that because of the differentiation of some of the variables, we have lost one observation.

The opposite case is with variables Industry and Manufacturing, also in France, which have proved to be stationary. We therefore had therefore to transform them into cumulative sums, as in the case of term spreads in our first model. After the difference transformation, they have proved to be I(1) at 5% level of significance.

Last note should be made about results of ADF tests in Germany, where the variables Service and Wholesale&retail have proved to be trend-stationary. We have therefore decided to include trend in our cointegration test and into the final VECM model in case of Germany, to make our results sufficiently robust against spurious correlation.

## 5.6 Second VECM, cointegration tests

In this subsection, we provide results of our Johansen tests of cointegration. Again, the second condition for our VECM is, that all variables have to be cointegrated. Results of the Johansen tests for Germany are reported in Table A.10, Table A.11, for Spain in Table A.12, Table A.13, for Italy in Table A.14, Table A.15 and for France in Table A.16 and Table A.17. In order to save space, we have included these tables into Appendix.

Because variables Service and Wholesale&retail have proved to be trend stationary for Germany, we have included trend into our cointegration tests. In Table A.10 and Table A.11, we can see that the first non-rejected null hypothesis of about number of cointegrations is number of cointegrations 5 in model with 3-month interest rates, 6-month interest rates, 12-month interest rates and 3-years interest rates, all if we accept 5% level of significance as minimum criteria for rejecting the null hypothesis. For model with 5-years interest rates, the first such non-rejected null hypothesis is for number of equations equal to 3.

In Table A.12 and Table A.13, we obtain by same method the number of cointegrations in models for Spain to be equal to 5 for models with 3-month

interest rates, 6-month interest rates and 12-month interest rates all on 5% level of significance as minimum criteria for rejecting the null hypothesis. For model with 3-years interest rates, the first such non-rejected null hypothesis is for number of equations equal to 6 and for model with 5-years interest rates, the first such non-rejected null hypothesis is for number of equations is equal to 4.

For Italy, we can see in Table A.14 and Table A.15 that the number of cointegrations is equal to 4 for models with 3-month interest rates and 6-month interest rates, equal to 5 for 12-month interest rates, all on 5% level of significance as minimum criteria for rejecting the null hypothesis. For model with 3-years interest rates, the first such non-rejected null hypothesis is for number of equations equal to 4 and for model with 5-years interest rates, the first such non-rejected null hypothesis is for number of equations is again equal to 3.

A difficulty is presented in Table A.16 and Table A.17 for France. Here, our cointegration tests report full rank for all the models. According to Johansen test methodology, this situation should mean that the variables are stationary. However, this hypothesis was clearly rejected by our ADF tests. A possible explanation for this could be, that there is to many variables compared to the number of observations in data. However, this situation prevents us from possibility to estimate our vector error correction model for France.

## 5.7 Results of the second VECM

The estimates of our second error correction model are presented in Table 5.13, Table 5.14 and Table 5.15. Following the Mulligan (2002), we focuses here solely on the cointegration equations. Because the Johansen tests have identified several cointegration equations for all models, we focus in our analysis on these cointegration equations, which are economically meaningful to us and of interest to our analysis. Following the Mulligan (2002), we thus focus on cointegrating vectors normalized with respect to interest rates. These relationships indicate how employment in different sectors reacts on changes in interest rates.

Contrary to Mulligan (2002), in none of the country do our estimates consistently have the same signs across all maturities. In all models for all countries, also the effects of changes in volumes of loans to households and non-financial corporations are effectively zero.

In Table 5.13, we can see that also the effects of interest rates on rate of growths of labor employment in german construction and finance sector are

effectively zero for most interest rates. Only exception is the differenced 5-years interest rate. The same is true for labor employment in construction sectors also in Italy and Spain (Table 5.14 and Table 5.15). In Italy, we have found the cointegration with differenced 5-years interest rates, like in Germany, but estimates differ in signs.

Table 5.13: Vector Error Correction Model 2: Germany

| Interest rates | diff_hous | diff_nf_corp | diff_Constr | diff_Finan |
|---|---|---|---|---|
| 3-month rates | 0.0000 | 0.0000 | 0.0000 | 0.0000 |
| 6-month rates | 0.0000 | 0.0000 | 0.0000 | 0.0000 |
| 12-month rates | 0.0000 | 0.0000 | 0.0000 | 0.0000 |
| 3-years | 0.0000 | 0.0000 | 0.0000 | 0.0000 |
| diff_5-years | 0.0000 | 0.0000 | 0.0071 | -0.1319 |

| Interest rates | Industry | Manufacturing | diff_Pub_adm | Real_estate |
|---|---|---|---|---|
| 3-month rates | -0.0112 | 0.0201 | -0.0266 | -0.1130 |
| 6-month rates | -0.0161 | 0.0278 | -0.0204 | -0.1383 |
| 12-month rates | -0.0398 | 0.0581 | -0.0182 | -0.1735 |
| 3-years | -0.0144 | -0.0138 | 0.0861 | 0.2018 |
| diff_5-years | 0.0139 | -0.0195 | 0.0002 | 0.0209 |

| Interest rates | Service | Wholesale&retail | const | trend |
|---|---|---|---|---|
| 3-month rates | -0.1130 | 0.0260 | -0.0070 | -23.6079 |
| 6-month rates | -0.1383 | 0.0323 | -0.0106 | -15.4295 |
| 12-month rates | -0.1735 | 0.0399 | -0.0187 | 17.6276 |
| 3-years | 0.2018 | -0.0915 | 0.0356 | 56.9077 |
| diff_5-years | 0.0209 | -0.0105 | 0.0060 | -1.4006 |

For finance sector, the negative cointegration relationship dominates across most of maturities in all countries. This is in accordance with findings for finance sector in Mulligan (2002). The same can be said about estimates for industry sector, the negative cointegration relationship dominates across most of maturities in all countries. This is also in accordance with findings in Mulligan (2002). However, we can find clear pattern that with the long-term interest rates, this relationship changes into positive cointegration. The economic interpretation for this relationship could be, that industry sector reacts negatively on increase of the costs of variable capital and positively on the increase of the costs of fixed capital.

Table 5.14: Vector Error Correction Model 2: Spain

| Interest rates | diff_hous | diff_nf_cor | diff_Constr | diff_Finance |
|---|---|---|---|---|
| 3-month rates | 0.0000 | 0.0000 | 0.0000 | 0.0000 |
| 6-month rates | -0.0000 | 0.0000 | -0.0000 | -1.3219 |
| 12-month rates | 0.0000 | 0.0000 | 0.0000 | -0.5177 |
| 3-years | -0.0000 | 0.0000 | -0.0000 | 0.0000 |
| diff_5-years | 0.0000 | 0.0000 | 0.0000 | 0.1760 |

| Interest rates | Industry | diff_Manuf | diff_Pubadm | diff_Real_est |
|---|---|---|---|---|
| 3-month rates | -0.1360 | 0.1176 | 0.0779 | -0.9903 |
| 6-month rates | -0.0786 | 0.0670 | 0.1015 | -0.9242 |
| 12-month rates | -0.1046 | 0.0891 | 0.0552 | -1.3043 |
| 3-years | 0.0000 | -0.0083 | -0.0202 | 0.0428 |
| diff_5-years | 0.0001 | -0.0005 | -0.0134 | 0.0033 |

| Interest rates | diff_Service | dif_WhSl&Rtl | const | trend |
|---|---|---|---|---|
| 3-month rates | 0.5016 | -0.0041 | 70.0932 | — |
| 6-month rates | 0.5119 | 0.0398 | 39.7326 | — |
| 12-month rates | 0.6513 | 0.0160 | 55.6816 | — |
| 3-years | 0.2138 | -0.0360 | 17.7706 | — |
| diff_5-years | 0.0091 | -0.0105 | 1.4733 | — |

This relationship switches for the employment in manufacturing sector. Again, the cointegration vectors have same patterns consistently across countries, but differ across interest rates of different maturities. The signs of estimates are opposite to the signs in industry and the economic explanation is thus also opposite. This movement could be explained by the fact, that Manufacturing sector is closer to final consumption than Industry sector.

Table 5.15: Vector Error Correction Model 2: Italy

| Interest rates | diff_hous. | diff_nf_cor. | diff_Constr | Finance |
|---|---|---|---|---|
| 3-month rates | 0.0000 | -0.0000 | -0.0000 | -0.0142 |
| 6-month rates | 0.0000 | -0.0000 | -0.0000 | -0.0179 |
| 12-month rates | -0.0000 | -0.0000 | 0.0000 | -0.0000 |
| 3-years | -0.0000 | -0.0000 | 0.0000 | -0.0199 |
| diff_5-years | 0.0000 | -0.0000 | -3.9330 | 0.5745 |

| Interest rates | Industry | Manufactur | diff_Pubadm | Real_estate |
|---|---|---|---|---|
| 3-month rates | -0.1040 | 0.0964 | -0.0278 | -0.2052 |
| 6-month rates | -0.0888 | 0.0822 | -0.0287 | -0.1516 |
| 12-month rates | -0.0582 | 0.0548 | -0.0147 | 0.0690 |
| 3-years | 0.0253 | -0.0312 | 0.0607 | -0.2409 |
| diff_5-years | 0.5936 | -0.4927 | 0.7904 | -2.5083 |

| Interest rates | diff_Service | Wholesale&ret | const | trend |
|---|---|---|---|---|
| 3-month rates | 0.0953 | 0.0127 | 29.6136 | — |
| 6-month rates | 0.0733 | 0.0101 | 30.0547 | — |
| 12-month rates | 0.0134 | -0.0018 | 29.7671 | — |
| 3-years | 0.0428 | 0.0156 | -26.5215 | — |
| diff_5-years | 1.5864 | 0.1463 | -1459.5617 | — |

The estimates of cointegrations between first differences of employment in public administration sector differs across countries and also across interest rate of different maturities. However, we do not provide any expectations regarding to how should the employment in Public administration reacts on interest rates, as we would generally do not expect the that Public administration would strongly react on economic incentives (when we talk about employment).

The estimates for employment in Real estate sector also differs across countries, but general pattern is, that long term employment reacts negatively on increases in short term interest rates and positively on increases of long-term interest rates. Here, we lack any possibility to compare our results with those

provided in original model in Mulligan (2002), as the author do not operates with real estate sector labor data. In his model and dataset, the real estate is part of the financial sector data. We therefore can confirm that our estimates on real estate are generally consistent with estimates on Finance sector, although for different countries and interest rates these estimates differ.

The last two sectors are services and whole&retail. These two sectors are closest to final consumption, and we would therefore expect to have positive signs to the previous variables. This is in fact true for Italy, where employment in both sectors is positively cointegrated with interest rates. In case of Spain, this is true for employment in Service, while the employment in Wholesale&Retail sector is cointegrated negatively. In the case of Germany, this situation is exactly opposite.

## 5.8 Concluding remarks on second VECM

Our estimates of second error correction model are more favorable for our next two hypotheses. In first instance, we have found a cointegration system between variables, which in itself is a powerful finding. We have also generally succeeded in finding the pattern, according to which lowering the interest rates leads to boom in sectors more distant from final consumption and decline in sectors closer to final consumption. We successfully confirmed the results from Mulligan (2002) for European data.

Although we did not find consistent results across interest rates of different maturities as in Mulligan (2002), we have found our estimates to have generally consistent patterns across different countries. This represents a support for two of the hypotheses made by the Austrian business cycle theory regarding the business cycles.

It should be also pointed out, that our findings differ in the levels on which the variables interact between themselves. Especially in case of Spain, the variables on sectoral employment reacts on changes in interest rates in their first differences, which differs from findings made in Mulligan (2002).

# Chapter 6

# Conclusion

In this thesis, we have focused on testing of the Austrian business cycle theory on data from euro area. This is still a relatively unexplored area within the Austrian economics and this thesis contributes to the expansion of number of studies on this topic.

We have provided a description of main pillars of the Austrian business cycle theory and made a summarization of main econometrical studies on this theory. We identified three testable hypotheses regarding the business cycles based on previous studies made by Mulligan (2002) and Mulligan (2006). This thesis with some changes re-estimates these papers on European data.

First of these identified hypotheses is, that with a decrease of market interest rate below the level of natural interest rate, there will be an increase of real consumable output in the short run and a decrease of real consumable output in the long run. According to next two hypothesis a lowering of interest rates leads to boom in sectors of producer goods and to the decline in sector of consumer goods.

To test first hypothesis, we have collected data on real consumable output and interest rate term spreads for Germany, France, Italy and Spain on period between 1996 to 2018. We have also included the data on volume of loans to households and non-financial corporations in order to control on effects of quantitative easing. To test next two hypotheses, we have collected data on sectoral employment and interest rates in Germany, France, Italy and Spain also for period between 1996 to 2018.

We have constructed two vector error correction models to test these hypotheses and estimated them. The results are ambiguous. We have identified cointegration relationships among variables in all cases except for one. In first

model, we have failed to repeat the results from Mulligan (2006) on European data. We have also identified several inconsistencies in the original study.

Our estimates of the second model were more favorable for the Austrian business cycle theory. In all countries except for France, we identified a clear pattern, according to which changes in interest rates leads the changes in sectoral employment of labor. This finding represents a strong support for a Hayekian analysis of the structure of production.

# Bibliography


Bismans, F. & C. Mougeot (2009): "Austrian Business Cycle Theory: Empirical Evidence." *The Review of Austrian Economics* **22(3)**: p. 241–257.

EMI (1996): *Progress Towards Convergence 1996*. European Monetary Institute, Frankfurt am Main. Available from: https://www.ecb.europa.eu/pub/pdf/conrep/cr1996en.pdf. Accessed: 2019-05-05.

Garrison, R. W. (2001): *Time and Money: The Macroeconomics of Capital Structure*. London: Routledge.

Geffen, D. & T. Kenyon (2005): "Measuring Varieties of Capitalism: A New Panel Dataset for the OECD Countries, 1970-2002." In "Conference Papers – Midwestern Political Science Association," pp. 1–28.

von Hayek, F. A. (1967): *Prices and Production*. New York: Augustus M. Kelly Publishers.

Johansen, S. (1991): "Estimation and Hypothesis Testing of Cointegration Vectors in Gaussian Vector Autoregressive Models." *Econometrica* **59(6)**: p. 1551–1580.

Johansen, S. & K. Juselius (1990): "Maximum Likelihood Estimation and Inference on Cointegration—with Applications to the Demand for Money." *Oxford Bulletin of Economics and Statistics* **52**: pp. 169–220.

Keeler, J. P. (2001): "Empirical Evidence on the Austrian Business Cycle Theory." *The Review of Austrian Economics* **14(4)**: pp. 331–351.

von Mises, L. (1998): *Human Action*. Auburn: The Ludwig von Mises Institute.

Mulligan, R. F. (2002): "A Hayekian analysis of the term structure of production." *The Quarterly Journal of Austrian Economics* **5(2)**: pp. 17–33.

Mulligan, R. F. (2006): "An Empirical Examination of Austrian Business Cycle Theory." *The Quarterly Journal of Austrian Economics* **9(2)**: pp. 69–93.

Rothbard, M. N. (2009): *Man, Economy, and State with Power and Market.* Auburn: Ludwig von Mises Institute.

Shostak, F. (2017): "Do Seasonal Adjustments Help Identify Business Cycles?" Available from: https://mises.org/wire/do-seasonal-adjustments-help-identify-business-cycles. Accessed: 2019-05-05.

de Soto, J. H. (2006): *Money, Bank Credit, and Economic Cycles.* Auburn: Ludwig von Mises Institute.

Wainhouse, C. E. (1984): "Empirical Evidence for Hayek's Theory of Economic Fluctuations." In B. N. Siegel (editor), "Money in Crisis: The Federal Reserve, the Economy, and Monetary Reform," chapter 2, pp. 37–71. San Francisco: Pacific Institute for Public Policy Research.

Wooldridge, J. M. (2016): *Introductory Econometrics: A Modern Approach, 6th edition.* Boston: Cengage Learning.

# Appendix A

# Appendix

Table A.1: Augmented Dickey–Fuller test: Germany

| Augmented Dickey–Fuller tests for Germany 8 Lags | | | | |
|---|---|---|---|---|
| Variable | Levels | | First differences | |
| | Intercept | Inter.+Trend | Intercept | Inter.+Trend |
| ln spread | -2.7442 *** | -2.8806 | -4.1808 *** | -4.1228 *** |
| ln real_cons | 2.0301 | -2.7709 | -2.3167 ** | -2.9974 |
| ln diff_hous | -0.1576 | -0.953 | -3.5542 *** | -4.0434 *** |
| ln diff_nf_cor | 0.0951 | -3.4506 ** | -4.4108 *** | -4.408 *** |
| ln cumul_spr | 0.7767 | -3.1369 | -2.411 ** | -2.2998 |
| Critical values | 1% -2.6 | 1% -4.04 | 1% -2.6 | 1% -4.04 |
| | 5% -1.95 | 5% -3.45 | 5% -1.95 | 5% -3.45 |
| | 10% -1.61 | 10% -3.15 | 10% -1.61 | 10% -3.15 |

Table A.2: Augmented Dickey–Fuller test: Spain

| Augmented Dickey–Fuller tests for Spain 8 Lags | | | | |
|---|---|---|---|---|
| Variable | Levels | | First differences | |
| | Intercept | Inter. + Trend | Intercept | Inter. + Trend |
| ln spread | -2.7442 *** | -2.8806 | -4.1808 *** | -4.1228 *** |
| ln real_cons | 1.0318 | -2.4938 | -1.994 ** | -2.2569 |
| ln diff_hous | -0.7012 | -2.0910 | -4.1297 *** | -4.0767 *** |
| ln diff_nf_cor | -0.4225 | -2.8412 | -4.7419 *** | -4.6762 *** |
| ln cumul_spr | 0.7767 | -3.1369 | -2.411 ** | -2.2998 |
| Critical values | 1% -2.6 | 1% -4.04 | 1% -2.6 | 1% -4.04 |
| | 5% -1.95 | 5% -3.45 | 5% -1.95 | 5% -3.45 |
| | 10% -1.61 | 10% -3.15 | 10% -1.61 | 10% -3.15 |

Table A.3: Augmented Dickey–Fuller test: Italy

| Augmented Dickey–Fuller tests for Italy 8 Lags | | | | |
|---|---|---|---|---|
| Variable | Levels | | First differences | |
| | Intercept | Inter. + Trend | Intercept | Inter. + Trend |
| ln spread | -2.7442 *** | -2.8806 | -4.1808 *** | -4.1228 *** |
| ln real_cons | 0.528 | -2.6722 | -2.6856 *** | -2.8826 |
| ln diff_hous | -0.2338 | -2.0395 | -3.1742 *** | -3.1653 * |
| ln diff_nf_cor | -0.1365 | -2.5001 | -3.5142 *** | -3.5069 ** |
| ln cumul_spr | 0.7767 | -3.1369 | -2.411 ** | -2.2998 |
| Critical values | 1% -2.6 | 1% -4.04 | 1% -2.6 | 1% -4.04 |
| | 5% -1.95 | 5% -3.45 | 5% -1.95 | 5% -3.45 |
| | 10% -1.61 | 10% -3.15 | 10% -1.61 | 10% -3.15 |

Table A.4: Augmented Dickey–Fuller test: France

| Augmented Dickey–Fuller tests for France 8 Lags | | | | |
|---|---|---|---|---|
| Variable | Levels | | First differences | |
| | Intercept | Inter. + Trend | Intercept | Inter. + Trend |
| ln spread | -2.7442 *** | -2.8806 | -4.1808 *** | -4.1228 *** |
| ln real_cons | 1.2376 | -2.2531 | -1.7115 * | -2.4483 |
| ln diff_hous | 0.7052 | -1.9648 | -3.0957 *** | -3.1405 |
| ln diff_nf_cor | 0.2519 | -3.4991 ** | -4.4234 *** | -4.3944 *** |
| ln cumul_spr | 0.7767 | -3.1369 | -2.411 ** | -2.2998 |
| Critical values | 1% -2.6 | 1% -4.04 | 1% -2.6 | 1% -4.04 |
| | 5% -1.95 | 5% -3.45 | 5% -1.95 | 5% -3.45 |
| | 10% -1.61 | 10% -3.15 | 10% -1.61 | 10% -3.15 |

Table A.5: Augmented Dickey–Fuller test: France - adjusted for real consumption

| Augmented Dickey–Fuller tests for France (with differenced real consumption) 8 Lags | | | | |
|---|---|---|---|---|
| Variable | Levels | | First differences | |
| | Intercept | Inter. + Trend | Intercept | Inter. + Trend |
| ln spread | -2.7442 *** | -2.8806 | -4.1808 *** | -4.1228 *** |
| ln diff_real_cons | -0.2875 | -2.6475 | -4.5138 *** | -4.4255 *** |
| ln diff_hous | 0.7052 | -1.9648 | -3.0957 *** | -3.1405 |
| ln diff_nf_cor | 0.2519 | -3.4991 ** | -4.4234 *** | -4.3944 *** |
| ln cumul_spr | 0.7767 | -3.1369 | -2.4110 ** | -2.2998 |
| Critical values | 1% -2.6 | 1% -4.04 | 1% -2.6 | 1% -4.04 |
| | 5% -1.95 | 5% -3.45 | 5% -1.95 | 5% -3.45 |
| | 10% -1.61 | 10% -3.15 | 10% -1.61 | 10% -3.15 |

Table A.6: Augmented Dickey–Fuller test II: Germany

| Augmented Dickey–Fuller tests for Germany 8 Lags | | | | |
|---|---|---|---|---|
| Variable | Levels | | First differences | |
| | Intercept | Int. + Trend | Intercept | Int. + Trend |
| diff_Construction | -1.9125 * | -2.3189 | -4.6022 *** | -4.6454 *** |
| diff_Finance | -1.6888 * | -2.8384 | -4.0954 *** | -4.1071 *** |
| Industry | -0.1454 | -0.7909 | -2.2362 ** | -2.8834 |
| Manufacturing | -0.0182 | -0.8478 | -2.3273 ** | -2.8271 |
| diff_Pub_admin | -0.7012 | -3.1000 | -4.3193 *** | -4.2753 *** |
| Real_estate | 0.6252 | -3.4067 * | -3.1868 *** | -3.1134 |
| Service | 0.879 | -3.5349 ** | -2.0559 ** | -2.3079 |
| Wholesale&retail | 1.2401 | -3.555 ** | -2.1416 ** | -2.8234 |
| 3-month rates | -1.5357 | -2.727 | -3.5036 *** | -3.7052 ** |
| 6-month rates | -1.5142 | -2.6805 | -3.4807 *** | -3.6727 ** |
| 12-month rates | -1.5171 | -2.6401 | -3.4105 *** | -3.5830 ** |
| 3-years | -1.5972 | -2.2005 | -2.5307 ** | -3.5183 ** |
| diff_5-years | -1.2006 | -1.9485 | -3.4084 *** | -3.3982 * |
| diff_households | -1.1958 | -0.927 | -3.3158 *** | -3.7997 ** |
| diff_nf_corporations | -1.4661 | -2.5604 | -3.5859 *** | -3.6278 ** |
| Critical | 1% -2.6 | 1% -4.04 | 1% -2.6 | 1% -4.04 |
| values | 5% -1.95 | 5% -3.45 | 5% -1.95 | 5% -3.45 |
| | 10% -1.61 | 10% -3.15 | 10% -1.61 | 10% -3.15 |

Table A.7: Augmented Dickey–Fuller test II: Spain

| Augmented Dickey–Fuller tests for Spain 8 Lags | | | | |
|---|---|---|---|---|
| Variable | Levels | | First differences | |
| | Intercept | Int. + Trend | Intercept | Int. + Trend |
| diff_Construction | -1.8614 * | -1.7198 | -3.5997 *** | -3.609 ** |
| diff_Finance | -1.7116 * | -2.0233 | -5.1449 *** | -5.0746 *** |
| Industry | -0.8636 | -2.2753 | -1.9706 ** | -1.8551 |
| diff_Manufacturing | -1.9881 ** | -1.8662 | -4.1875 *** | -4.2641 *** |
| diff_Pub_admin | -0.8565 | -1.8969 | -4.1649 *** | -4.1165 *** |
| diff_Real_estate | -1.3312 | -1.6197 | -5.0857 *** | -5.0629 *** |
| diff_Service | -1.2034 | -1.8586 | -5.1589 *** | -5.0884 *** |
| diff_Wholesale&retail | -1.8119 * | -2.2036 | -4.5412 *** | -4.5004 *** |
| 3-month rates | -1.5357 | -2.727 | -3.5036 *** | -3.7052 ** |
| 6-month rates | -1.5142 | -2.6805 | -3.4807 *** | -3.6727 ** |
| 12-month rates | -1.5171 | -2.6401 | -3.4105 *** | -3.5830 ** |
| 3-years | -1.5972 | -2.2005 | -2.5307 ** | -3.5183 ** |
| diff_5-years | -1.2006 | -1.9485 | -3.4084 *** | -3.3982 * |
| diff_households | -1.6181 * | -2.2468 | -2.1557 ** | -2.0902 |
| diff_nf_corporations | -1.6366 * | -2.4727 | -2.9851 *** | -2.9688 |
| Critical values | 1% -2.6 | 1% -4.04 | 1% -2.6 | 1% -4.04 |
| | 5% -1.95 | 5% -3.45 | 5% -1.95 | 5% -3.45 |
| | 10% -1.61 | 10% -3.15 | 10% -1.61 | 10% -3.15 |

Table A.8: Augmented Dickey–Fuller test II: Italy

| Augmented Dickey–Fuller tests for Italy 8 Lags | | | | |
|---|---|---|---|---|
| Variable | Levels | | First differences | |
| | Intercept | Int. + Trend | Intercept | Int. + Trend |
| diff_Construction | -1.3918 | -2.0435 | -4.5729 *** | -4.5162 *** |
| Finance | -0.2712 | -0.899 | -2.6832 *** | -2.8968 |
| Industry | -1.3223 | -1.7241 | -2.1768 ** | -2.3298 |
| Manufacturing | -1.5651 | -1.7729 | -2.1998 ** | -2.5992 |
| diff_Pub_admin | -1.7316 * | -1.955 | -3.2582 *** | -3.1939 * |
| Real_estate | 1.1646 | -2.0226 | -3.2145 *** | -4.2019 *** |
| diff_Service | -1.8509 * | -2.9239 | -6.2197 *** | -6.2433 *** |
| Wholesale&retail | 1.7081 | -3.0318 | -2.3349 ** | -3.1377 |
| 3-month rates | -1.5357 | -2.727 | -3.5036 *** | -3.7052 ** |
| 6-month rates | -1.5142 | -2.6805 | -3.4807 *** | -3.6727 ** |
| 12-month rates | -1.5171 | -2.6401 | -3.4105 *** | -3.5830 ** |
| 3-years | -1.5972 | -2.2005 | -2.5307 ** | -3.5183 ** |
| diff_5-years | -1.2006 | -1.9485 | -3.4084 *** | -3.3982 * |
| diff_households | -0.9968 | -1.9353 | -3.272 *** | -3.281 * |
| diff_nf_corporations | -1.2914 | -2.5416 | -3.4883 *** | -3.4947 ** |
| Critical values | 1% -2.6 | 1% -4.04 | 1% -2.6 | 1% -4.04 |
| | 5% -1.95 | 5% -3.45 | 5% -1.95 | 5% -3.45 |
| | 10% -1.61 | 10% -3.15 | 10% -1.61 | 10% -3.15 |

Table A.9: Augmented Dickey–Fuller test II: France

| Augmented Dickey–Fuller tests for France 8 Lags | | | | |
|---|---|---|---|---|
| Variable | Levels | | First differences | |
| | Intercept | Int. + Trend | Intercept | Int. + Trend |
| Construction | 1.1873 | -1.5993 | -2.183 ** | -3.0921 |
| diff_Finance | -1.0127 | -0.9975 | -1.7207 * | -2.0786 |
| cumul_Industry | -0.4414 | -1.2943 | -2.3042 ** | -2.4645 |
| cumul_Manufacturing | -0.439 | -1.3708 | -2.3555 ** | -2.3924 |
| diff_Pub_admin | -1.4554 | -2.9334 | -4.108 *** | -4.1268 *** |
| Real_estate | 0.2388 | -2.2267 | -3.3277 *** | -3.4395 * |
| Service | 1.1554 | -3.4338 * | -2.9123 *** | -2.9275 |
| diff_Wholesale&retail | -1.5302 | -2.5478 | -4.205 *** | -4.1496 *** |
| 3-month rates | -1.5357 | -2.727 | -3.5036 *** | -3.7052 ** |
| 6-month rates | -1.5142 | -2.6805 | -3.4807 *** | -3.6727 ** |
| 12-month rates | -1.5171 | -2.6401 | -3.4105 *** | -3.5830 ** |
| 3-years | -1.5972 | -2.2005 | -2.5307 ** | -3.5183 ** |
| diff_5-years | -1.2006 | -1.9485 | -3.4084 *** | -3.3982 * |
| diff_households | -0.1200 | -1.8682 | -2.9863 *** | -3.0052 |
| diff_nf_corporations | -0.8265 | -3.3166 * | -4.8562 *** | -4.8258 *** |
| Critical | 1% -2.6 | 1% -4.04 | 1% -2.6 | 1% -4.04 |
| values | 5% -1.95 | 5% -3.45 | 5% -1.95 | 5% -3.45 |
| | 10% -1.61 | 10% -3.15 | 10% -1.61 | 10% -3.15 |

Table A.10: Tests for Cointegration: Germany I

| | V1 | 10pct | 5pct | 1pct |
|---|---|---|---|---|
| | Model with 3-month interest rate | | | |
| r <= 10 \| | 4.60159 | 10.49000 | 12.25000 | 16.26000 |
| r <= 9 \| | 12.19786 | 16.85000 | 18.96000 | 23.65000 |
| r <= 8 \| | 15.07361 | 23.11000 | 25.54000 | 30.34000 |
| r <= 7 \| | 29.94188 | 29.12000 | 31.46000 | 36.65000 |
| r <= 6 \| | 35.50634 | 34.75000 | 37.52000 | 42.36000 |
| r <= 5 \| | 46.46325 | 40.91000 | 43.97000 | 49.51000 |
| r <= 4 \| | 53.86440 | 46.32000 | 49.42000 | 54.71000 |
| r <= 3 \| | 71.05269 | 52.16000 | 55.50000 | 62.46000 |
| r <= 2 \| | 89.32071 | 57.87000 | 61.29000 | 67.88000 |
| r <= 1 \| | 95.86581 | 63.18000 | 66.23000 | 73.73000 |
| r = 0 \| | 101.23935 | 69.26000 | 72.72000 | 79.23000 |
| | Model with 6-month interest rate | | | |
| r <= 10 \| | 4.84891 | 10.49000 | 12.25000 | 16.26000 |
| r <= 9 \| | 12.24792 | 16.85000 | 18.96000 | 23.65000 |
| r <= 8 \| | 15.05642 | 23.11000 | 25.54000 | 30.34000 |
| r <= 7 \| | 29.83646 | 29.12000 | 31.46000 | 36.65000 |
| r <= 6 \| | 35.67390 | 34.75000 | 37.52000 | 42.36000 |
| r <= 5 \| | 47.14198 | 40.91000 | 43.97000 | 49.51000 |
| r <= 4 \| | 54.34050 | 46.32000 | 49.42000 | 54.71000 |
| r <= 3 \| | 71.45063 | 52.16000 | 55.50000 | 62.46000 |
| r <= 2 \| | 86.06618 | 57.87000 | 61.29000 | 67.88000 |
| r <= 1 \| | 95.81784 | 63.18000 | 66.23000 | 73.73000 |
| r = 0 \| | 105.32781 | 69.26000 | 72.72000 | 79.23000 |
| | Model with 12-month interest rate | | | |
| r <= 10 \| | 5.17813 | 10.49000 | 12.25000 | 16.26000 |
| r <= 9 \| | 12.37075 | 16.85000 | 18.96000 | 23.65000 |
| r <= 8 \| | 15.31868 | 23.11000 | 25.54000 | 30.34000 |
| r <= 7 \| | 28.89583 | 29.12000 | 31.46000 | 36.65000 |
| r <= 6 \| | 35.18563 | 34.75000 | 37.52000 | 42.36000 |
| r <= 5 \| | 47.17996 | 40.91000 | 43.97000 | 49.51000 |
| r <= 4 \| | 56.04633 | 46.32000 | 49.42000 | 54.71000 |
| r <= 3 \| | 68.90328 | 52.16000 | 55.50000 | 62.46000 |
| r <= 2 \| | 85.65698 | 57.87000 | 61.29000 | 67.88000 |
| r <= 1 \| | 94.59599 | 63.18000 | 66.23000 | 73.73000 |
| r = 0 \| | 107.56910 | 69.26000 | 72.72000 | 79.23000 |

Table A.11: Tests for Cointegration: Germany II

| | V1 | 10pct | 5pct | 1pct |
|---|---|---|---|---|
| | Model with 3-year interest rate | | | |
| r <= 10 \| | 9.09149 | 10.49000 | 12.25000 | 16.26000 |
| r <= 9 \| | 10.81681 | 16.85000 | 18.96000 | 23.65000 |
| r <= 8 \| | 25.34627 | 23.11000 | 25.54000 | 30.34000 |
| r <= 7 \| | 28.26157 | 29.12000 | 31.46000 | 36.65000 |
| r <= 6 \| | 36.13238 | 34.75000 | 37.52000 | 42.36000 |
| r <= 5 \| | 49.98460 | 40.91000 | 43.97000 | 49.51000 |
| r <= 4 \| | 60.12655 | 46.32000 | 49.42000 | 54.71000 |
| r <= 3 \| | 67.79090 | 52.16000 | 55.50000 | 62.46000 |
| r <= 2 \| | 86.23745 | 57.87000 | 61.29000 | 67.88000 |
| r <= 1 \| | 96.66669 | 63.18000 | 66.23000 | 73.73000 |
| r = 0 \| | 101.37848 | 69.26000 | 72.72000 | 79.23000 |
| | Model with 5-year interest rate | | | |
| r <= 10 \| | 5.04873 | 10.49000 | 12.25000 | 16.26000 |
| r <= 9 \| | 13.08002 | 16.85000 | 18.96000 | 23.65000 |
| r <= 8 \| | 15.93851 | 23.11000 | 25.54000 | 30.34000 |
| r <= 7 \| | 19.55005 | 29.12000 | 31.46000 | 36.65000 |
| r <= 6 \| | 29.77302 | 34.75000 | 37.52000 | 42.36000 |
| r <= 5 \| | 36.36711 | 40.91000 | 43.97000 | 49.51000 |
| r <= 4 \| | 42.53690 | 46.32000 | 49.42000 | 54.71000 |
| r <= 3 \| | 70.76166 | 52.16000 | 55.50000 | 62.46000 |
| r <= 2 \| | 84.06733 | 57.87000 | 61.29000 | 67.88000 |
| r <= 1 \| | 92.07132 | 63.18000 | 66.23000 | 73.73000 |
| r = 0 \| | 108.99737 | 69.26000 | 72.72000 | 79.23000 |

Table A.12: Tests for Cointegration: Spain I

| | V1 | 10pct | 5pct | 1pct |
|---|---|---|---|---|
| | Model with 3-month interest rate | | | |
| r <= 10 \| | 4.66652 | 7.52000 | 9.24000 | 12.97000 |
| r <= 9 \| | 8.10639 | 13.75000 | 15.67000 | 20.20000 |
| r <= 8 \| | 15.16193 | 19.77000 | 22.00000 | 26.81000 |
| r <= 7 \| | 26.26928 | 25.56000 | 28.14000 | 33.24000 |
| r <= 6 \| | 30.80405 | 31.66000 | 34.40000 | 39.79000 |
| r <= 5 \| | 36.03288 | 37.45000 | 40.30000 | 46.82000 |
| r <= 4 \| | 47.80856 | 43.25000 | 46.45000 | 51.91000 |
| r <= 3 \| | 51.76923 | 48.91000 | 52.00000 | 57.95000 |
| r <= 2 \| | 67.34346 | 54.35000 | 57.42000 | 63.71000 |
| r <= 1 \| | 105.19550 | 60.25000 | 63.57000 | 69.94000 |
| r = 0 \| | 109.07286 | 66.02000 | 69.74000 | 76.63000 |
| | Model with 6-month interest rate | | | |
| r <= 10 \| | 4.72646 | 7.52000 | 9.24000 | 12.97000 |
| r <= 9 \| | 7.70152 | 13.75000 | 15.67000 | 20.20000 |
| r <= 8 \| | 14.51659 | 19.77000 | 22.00000 | 26.81000 |
| r <= 7 \| | 25.56314 | 25.56000 | 28.14000 | 33.24000 |
| r <= 6 \| | 30.99149 | 31.66000 | 34.40000 | 39.79000 |
| r <= 5 \| | 34.96866 | 37.45000 | 40.30000 | 46.82000 |
| r <= 4 \| | 47.60058 | 43.25000 | 46.45000 | 51.91000 |
| r <= 3 \| | 53.18271 | 48.91000 | 52.00000 | 57.95000 |
| r <= 2 \| | 64.44195 | 54.35000 | 57.42000 | 63.71000 |
| r <= 1 \| | 92.78805 | 60.25000 | 63.57000 | 69.94000 |
| r = 0 \| | 108.26283 | 66.02000 | 69.74000 | 76.63000 |
| | Model with 12-month interest rate | | | |
| r <= 10 \| | 4.68037 | 7.52000 | 9.24000 | 12.97000 |
| r <= 9 \| | 8.02403 | 13.75000 | 15.67000 | 20.20000 |
| r <= 8 \| | 14.04355 | 19.77000 | 22.00000 | 26.81000 |
| r <= 7 \| | 25.06239 | 25.56000 | 28.14000 | 33.24000 |
| r <= 6 \| | 31.09786 | 31.66000 | 34.40000 | 39.79000 |
| r <= 5 \| | 34.05975 | 37.45000 | 40.30000 | 46.82000 |
| r <= 4 \| | 46.97757 | 43.25000 | 46.45000 | 51.91000 |
| r <= 3 \| | 53.63337 | 48.91000 | 52.00000 | 57.95000 |
| r <= 2 \| | 61.05871 | 54.35000 | 57.42000 | 63.71000 |
| r <= 1 \| | 84.76086 | 60.25000 | 63.57000 | 69.94000 |
| r = 0 \| | 106.10157 | 66.02000 | 69.74000 | 76.63000 |

Table A.13: Tests for Cointegration: Spain II

| | V1 | 10pct | 5pct | 1pct |
|---|---|---|---|---|
| | Model with 3-year interest rate | | | |
| r <= 10 \| | 6.81506 | 7.52000 | 9.24000 | 12.97000 |
| r <= 9 \| | 10.39643 | 13.75000 | 15.67000 | 20.20000 |
| r <= 8 \| | 19.69375 | 19.77000 | 22.00000 | 26.81000 |
| r <= 7 \| | 25.85286 | 25.56000 | 28.14000 | 33.24000 |
| r <= 6 \| | 34.10209 | 31.66000 | 34.40000 | 39.79000 |
| r <= 5 \| | 42.03031 | 37.45000 | 40.30000 | 46.82000 |
| r <= 4 \| | 50.39155 | 43.25000 | 46.45000 | 51.91000 |
| r <= 3 \| | 58.39639 | 48.91000 | 52.00000 | 57.95000 |
| r <= 2 \| | 74.58146 | 54.35000 | 57.42000 | 63.71000 |
| r <= 1 \| | 83.89540 | 60.25000 | 63.57000 | 69.94000 |
| r = 0 \| | 120.35714 | 66.02000 | 69.74000 | 76.63000 |
| | Model with 5-year interest rate | | | |
| r <= 10 \| | 4.96444 | 7.52000 | 9.24000 | 12.97000 |
| r <= 9 \| | 9.76971 | 13.75000 | 15.67000 | 20.20000 |
| r <= 8 \| | 11.42320 | 19.77000 | 22.00000 | 26.81000 |
| r <= 7 \| | 19.90583 | 25.56000 | 28.14000 | 33.24000 |
| r <= 6 \| | 23.62592 | 31.66000 | 34.40000 | 39.79000 |
| r <= 5 \| | 37.10143 | 37.45000 | 40.30000 | 46.82000 |
| r <= 4 \| | 42.65824 | 43.25000 | 46.45000 | 51.91000 |
| r <= 3 \| | 52.16469 | 48.91000 | 52.00000 | 57.95000 |
| r <= 2 \| | 69.89448 | 54.35000 | 57.42000 | 63.71000 |
| r <= 1 \| | 81.10950 | 60.25000 | 63.57000 | 69.94000 |
| r = 0 \| | 107.15152 | 66.02000 | 69.74000 | 76.63000 |

Table A.14: Tests for Cointegration: Italy I

| | V1 | 10pct | 5pct | 1pct |
|---|---|---|---|---|
| | Model with 3-month interest rate | | | |
| r <= 10 \| | 3.77443 | 7.52000 | 9.24000 | 12.97000 |
| r <= 9 \| | 6.05283 | 13.75000 | 15.67000 | 20.20000 |
| r <= 8 \| | 11.74963 | 19.77000 | 22.00000 | 26.81000 |
| r <= 7 \| | 13.79286 | 25.56000 | 28.14000 | 33.24000 |
| r <= 6 \| | 28.62330 | 31.66000 | 34.40000 | 39.79000 |
| r <= 5 \| | 40.76009 | 37.45000 | 40.30000 | 46.82000 |
| r <= 4 \| | 44.22854 | 43.25000 | 46.45000 | 51.91000 |
| r <= 3 \| | 63.49781 | 48.91000 | 52.00000 | 57.95000 |
| r <= 2 \| | 67.71893 | 54.35000 | 57.42000 | 63.71000 |
| r <= 1 \| | 91.24527 | 60.25000 | 63.57000 | 69.94000 |
| r = 0 \| | 138.84796 | 66.02000 | 69.74000 | 76.63000 |
| | Model with 6-month interest rate | | | |
| r <= 10 \| | 3.87792 | 7.52000 | 9.24000 | 12.97000 |
| r <= 9 \| | 6.08219 | 13.75000 | 15.67000 | 20.20000 |
| r <= 8 \| | 12.70240 | 19.77000 | 22.00000 | 26.81000 |
| r <= 7 \| | 13.21454 | 25.56000 | 28.14000 | 33.24000 |
| r <= 6 \| | 28.33672 | 31.66000 | 34.40000 | 39.79000 |
| r <= 5 \| | 42.74714 | 37.45000 | 40.30000 | 46.82000 |
| r <= 4 \| | 43.95304 | 43.25000 | 46.45000 | 51.91000 |
| r <= 3 \| | 62.13880 | 48.91000 | 52.00000 | 57.95000 |
| r <= 2 \| | 71.32739 | 54.35000 | 57.42000 | 63.71000 |
| r <= 1 \| | 90.89041 | 60.25000 | 63.57000 | 69.94000 |
| r = 0 \| | 139.23777 | 66.02000 | 69.74000 | 76.63000 |
| | Model with 12-month interest rate | | | |
| r <= 10 \| | 3.92464 | 7.52000 | 9.24000 | 12.97000 |
| r <= 9 \| | 5.91134 | 13.75000 | 15.67000 | 20.20000 |
| r <= 8 \| | 12.15341 | 19.77000 | 22.00000 | 26.81000 |
| r <= 7 \| | 13.15187 | 25.56000 | 28.14000 | 33.24000 |
| r <= 6 \| | 28.12660 | 31.66000 | 34.40000 | 39.79000 |
| r <= 5 \| | 41.81201 | 37.45000 | 40.30000 | 46.82000 |
| r <= 4 \| | 46.24002 | 43.25000 | 46.45000 | 51.91000 |
| r <= 3 \| | 60.41058 | 48.91000 | 52.00000 | 57.95000 |
| r <= 2 \| | 75.89704 | 54.35000 | 57.42000 | 63.71000 |
| r <= 1 \| | 91.90935 | 60.25000 | 63.57000 | 69.94000 |
| r = 0 \| | 137.50506 | 66.02000 | 69.74000 | 76.63000 |

Table A.15: Tests for Cointegration: Italy II

| | V1 | 10pct | 5pct | 1pct |
|---|---|---|---|---|
| | Model with 3-year interest rate | | | |
| r <= 10 \| | 6.27315 | 7.52000 | 9.24000 | 12.97000 |
| r <= 9 \| | 8.37523 | 13.75000 | 15.67000 | 20.20000 |
| r <= 8 \| | 15.86080 | 19.77000 | 22.00000 | 26.81000 |
| r <= 7 \| | 18.06424 | 25.56000 | 28.14000 | 33.24000 |
| r <= 6 \| | 29.81807 | 31.66000 | 34.40000 | 39.79000 |
| r <= 5 \| | 38.24182 | 37.45000 | 40.30000 | 46.82000 |
| r <= 4 \| | 42.22848 | 43.25000 | 46.45000 | 51.91000 |
| r <= 3 \| | 70.26454 | 48.91000 | 52.00000 | 57.95000 |
| r <= 2 \| | 74.54725 | 54.35000 | 57.42000 | 63.71000 |
| r <= 1 \| | 104.89304 | 60.25000 | 63.57000 | 69.94000 |
| r = 0 \| | 144.67229 | 66.02000 | 69.74000 | 76.63000 |
| | Model with 5-year interest rate | | | |
| r <= 10 \| | 4.48138 | 7.52000 | 9.24000 | 12.97000 |
| r <= 9 \| | 5.86007 | 13.75000 | 15.67000 | 20.20000 |
| r <= 8 \| | 11.17236 | 19.77000 | 22.00000 | 26.81000 |
| r <= 7 \| | 28.79424 | 25.56000 | 28.14000 | 33.24000 |
| r <= 6 \| | 29.00183 | 31.66000 | 34.40000 | 39.79000 |
| r <= 5 \| | 39.87927 | 37.45000 | 40.30000 | 46.82000 |
| r <= 4 \| | 45.34082 | 43.25000 | 46.45000 | 51.91000 |
| r <= 3 \| | 50.78519 | 48.91000 | 52.00000 | 57.95000 |
| r <= 2 \| | 78.47045 | 54.35000 | 57.42000 | 63.71000 |
| r <= 1 \| | 88.02036 | 60.25000 | 63.57000 | 69.94000 |
| r = 0 \| | 139.41766 | 66.02000 | 69.74000 | 76.63000 |

Table A.16: Tests for Cointegration: France I

| | V1 | 10pct | 5pct | 1pct |
|---|---|---|---|---|
| Model with 3-month interest rate | | | | |
| r <= 9 \| | 17.53828 | 7.52000 | 9.24000 | 12.97000 |
| r <= 8 \| | 26.36610 | 13.75000 | 15.67000 | 20.20000 |
| r <= 7 \| | 34.03575 | 19.77000 | 22.00000 | 26.81000 |
| r <= 6 \| | 45.04018 | 25.56000 | 28.14000 | 33.24000 |
| r <= 5 \| | 47.86740 | 31.66000 | 34.40000 | 39.79000 |
| r <= 4 \| | 54.25253 | 37.45000 | 40.30000 | 46.82000 |
| r <= 3 \| | 73.39923 | 43.25000 | 46.45000 | 51.91000 |
| r <= 2 \| | 85.40349 | 48.91000 | 52.00000 | 57.95000 |
| r <= 1 \| | 106.42473 | 54.35000 | 57.42000 | 63.71000 |
| r = 0 \| | 158.38922 | 60.25000 | 63.57000 | 69.94000 |
| Model with 6-month interest rate | | | | |
| r <= 9 \| | 16.37035 | 7.52000 | 9.24000 | 12.97000 |
| r <= 8 \| | 25.34773 | 13.75000 | 15.67000 | 20.20000 |
| r <= 7 \| | 30.07944 | 19.77000 | 22.00000 | 26.81000 |
| r <= 6 \| | 44.42784 | 25.56000 | 28.14000 | 33.24000 |
| r <= 5 \| | 45.57562 | 31.66000 | 34.40000 | 39.79000 |
| r <= 4 \| | 54.63912 | 37.45000 | 40.30000 | 46.82000 |
| r <= 3 \| | 67.69790 | 43.25000 | 46.45000 | 51.91000 |
| r <= 2 \| | 85.86958 | 48.91000 | 52.00000 | 57.95000 |
| r <= 1 \| | 107.75576 | 54.35000 | 57.42000 | 63.71000 |
| r = 0 \| | 147.14946 | 60.25000 | 63.57000 | 69.94000 |
| Model with 12-month interest rate | | | | |
| r <= 9 \| | 17.69761 | 7.52000 | 9.24000 | 12.97000 |
| r <= 8 \| | 22.89351 | 13.75000 | 15.67000 | 20.20000 |
| r <= 7 \| | 28.54753 | 19.77000 | 22.00000 | 26.81000 |
| r <= 6 \| | 45.36889 | 25.56000 | 28.14000 | 33.24000 |
| r <= 5 \| | 46.11618 | 31.66000 | 34.40000 | 39.79000 |
| r <= 4 \| | 54.71429 | 37.45000 | 40.30000 | 46.82000 |
| r <= 3 \| | 69.80254 | 43.25000 | 46.45000 | 51.91000 |
| r <= 2 \| | 86.87317 | 48.91000 | 52.00000 | 57.95000 |
| r <= 1 \| | 114.27246 | 54.35000 | 57.42000 | 63.71000 |
| r = 0 \| | 151.54312 | 60.25000 | 63.57000 | 69.94000 |

Table A.17: Tests for Cointegration: France II

| | V1 | 10pct | 5pct | 1pct |
|---|---|---|---|---|
| | Model with 3-year interest rate | | | |
| r <= 9 \| | 13.88149 | 7.52000 | 9.24000 | 12.97000 |
| r <= 8 \| | 18.06971 | 13.75000 | 15.67000 | 20.20000 |
| r <= 7 \| | 27.38049 | 19.77000 | 22.00000 | 26.81000 |
| r <= 6 \| | 37.38417 | 25.56000 | 28.14000 | 33.24000 |
| r <= 5 \| | 46.00230 | 31.66000 | 34.40000 | 39.79000 |
| r <= 4 \| | 49.09444 | 37.45000 | 40.30000 | 46.82000 |
| r <= 3 \| | 66.85465 | 43.25000 | 46.45000 | 51.91000 |
| r <= 2 \| | 92.40016 | 48.91000 | 52.00000 | 57.95000 |
| r <= 1 \| | 106.14036 | 54.35000 | 57.42000 | 63.71000 |
| r = 0 \| | 117.96109 | 60.25000 | 63.57000 | 69.94000 |
| | Model with 5-year interest rate | | | |
| r <= 9 \| | 14.20720 | 7.52000 | 9.24000 | 12.97000 |
| r <= 8 \| | 23.73003 | 13.75000 | 15.67000 | 20.20000 |
| r <= 7 \| | 36.39013 | 19.77000 | 22.00000 | 26.81000 |
| r <= 6 \| | 41.71324 | 25.56000 | 28.14000 | 33.24000 |
| r <= 5 \| | 49.59589 | 31.66000 | 34.40000 | 39.79000 |
| r <= 4 \| | 52.73556 | 37.45000 | 40.30000 | 46.82000 |
| r <= 3 \| | 71.50408 | 43.25000 | 46.45000 | 51.91000 |
| r <= 2 \| | 89.51944 | 48.91000 | 52.00000 | 57.95000 |
| r <= 1 \| | 106.34261 | 54.35000 | 57.42000 | 63.71000 |
| r = 0 \| | 122.17335 | 60.25000 | 63.57000 | 69.94000 |